TRI COMPONENT

PRODUCTS CORPORATION

2020

LOCKUP PRODUCTS BY TRI

973 Brook Avenue
Bronx, New York 10451-4209
www.tricomponent.com
1(800)FONE-TRI
Fax(718)402-2151

LOCKUP PRODUCTS BY TRI

LIST OF CONTENT: Page#

INTRODUCTION……. 1

SUFFIX CODE FOR LININGS…….. 5

LOCKUP LININGS LISTED BY OUTSIDE DIAMETER……. 7

FLOATING RINGS LISTED BY OUTSIDE DIAMETER……. 11

WOVEN CARBON LININGS …..…….. 12

LOCKUP LININGS LISTED BY TRI PART #..... 13

LOCKUP LININGS LISTED BY SONNAX PART #..... 29

LOCKUP LININGS LISTED BY RAYBESTOS PART #..... 37

LOCKUP FRICTION PLATES ……..…... 46

BONDING PROCEDURE……... 52

TYPYCAL BONDING PARAMETERS…….. 61

PRODUCTION SUPPLIES……. 63

GROOVED AND SPECIAL DESIGN LININGS ……..……. 65

WARRANTY…….. 78

INTRODUCTION

WELCOME TO THE WORLD OF TRI

Tri Component has been the leader in lock-up technology for over fifty years. Among many innovations are:

- First to offer after market floating rings (in 1979), having developed patents in the field.
- First to supply non-asbestos materials. Tri has never supplied asbestos materials.
- First to offer non-solvent adhesive, we have never used M.E.K. solvent adhesives. Tri has over 30 years experience supplying non-solvent.
- First to provide bonding services to the industry. Our laboratories and enginereers work hands-on continuously, and offer free trouble shooting consultations.
- First to introduce LockJoint™ technology.

The industry is just beginning to adopt Tri's pioneering approach.

Worker safety and environmental considerations have always been uppermost at Tri. We have provided all this without cost premium. In addition we are able to rebond and totally rebuild cork type clutches dating from 1948 to 1968.

We are committed to total service supplying materials, precut linings, end complete rebuilds. You are invited to visit our plant for hands-on orientation, training, and trouble-shooting consultations.

A WORD ABOUT TRI'S FRICTION MATERIALS

In this catalog you will find four grades of materials offered, namely black (carbon), green (Kevlar®), high carbon, tan. Each of these grades will provide you with performance, based and wolen carbon on user preference and applications.

All formulas are non-asbestos and based on the teachings of the late, great, Robert A. Todd, who deserves mention and the industry's gratitude. The high carbon grade is specifically formulated for GM applications to match OE requirements. This has been proven millions of successful miles.

All Tri's materials undergo dynamometer testing and comparison. Tri's materials have always been outstanding and have outperformed OE brands in critical areas, to the point where Tri's formulas have replaced them in well known applications. You may expect brand recognition and loyalty as you partner from Tri. Tri is committed to help your business grow.

TRI FRICTION MATERIALS

Carbon. The first of the "carbon" formulations suitable for "tailoring" to customer requirements.

High Carbon. The ultimate premium formulation, addresses "High Carbon" GM Ec3 and controlled slip applications. A proven problem solver in many problematic situations.

Kevlar®. This Kevlar® fiber content green material has gained wide acceptance resulting from enhanced formulation. Exceptional heat resistance and wear qualities addresses shudder during TCC lockup.

Tan. General purpose OE level performance, first non- asbestos material, excellent coefficient of friction.

Woven Carbon. Premium OE material used where specified by vehicle manufacturer, only in 0.020" thickness.

ABOUT TRI COMPONENT ADHESIVES

- Formulations of exceptional resin purity, exactly as used by OE.
- Highest shear strength.
- Proven to bond at 45 second cycles (using suitably designed equipment)
- Exceptional shelf life.
- Compatible with all tacking materials commonly used in processing (ie: MEK)**.** (Although unnecessary)
- Generous adhesive film, beneficial in filling grooves and voids.
- Routinely used with Tri's Bond Aid™ supplementary adhesives, optionally used by many rebuilders for added security. See supplies section of this catalog.
- Supplied on the entire Tri line of premium friction materials.
- Bonding engineers on call for tech support.
- Proven and approved by the world's major OE’s and rebuilders**.**

INTRODUCING LockJoint™ TECHNOLOGY

Available for most lockup applications, exclusively Tri.

Tri Component LockJoint™ linings were pioneered by GM and are used by all European OEM's in their production of torque converter clutches. The segmented LockJoint™ is a proven technology. Tri has mastered techniques to make your handling and application trouble free.

Tri linings handle as a solid ring, resulting in perfect bonding as a virtually invisible joint. Combined with Tri's adhesives, a bond results with the highest shear strength.

Among other advantages, Tri linings are available at considerable cost savings. Now, more than ever, cost control is a major factor for your success. The LockJoint™ lining is a valuable tool in achieving your goals and is available at the most dramatic, cost savings ever achieved in the industry.

Available in all friction materials (Kevlar®, Tan, Carbon, High Carbon and Woven Carbon).

Order your **free** samples now.

Add suffix **"J"** to your regular lining part number between the last digit and the first suffix letter.

LOCKUP LININGS

SUFFIX CODE FOR LININGS

Add suffix (or combination of suffixes) to the base part number to create products to your material and thickness specifications

PART No.	J	M	S
	LockJoint™	Modulated Grooved	With Cut - Outs

.040-.045 thickness			
C	**HC**	**K**	**T**
Carbon	High Carbon	KEVLAR® (green)	Tan

.070 Thickness				
X70	**X70C**	**X70HC**	**X70K**	**X70T**
Red	Carbon	High Carbon	KEVLAR® (green)	Tan

.020 Thickness
WC
Woven Carbon

EXAMPLES:

SX-23-4**C**	Carbon, .040-.045 Thick
SX-23-4**HC**	High Carbon, .040-.045 Thick
SX-23-4**K**	Kevlar® (green), .040-.045 Thick
SX-23-4**T**	Tan, .040-.045 Thick
SX-23-4**X70**	Red, .070 Thick
SX-23-4**X70C**	Carbon, .070 Thick
SX-23-4**X70HC**	High Carbon, .070 Thick
SX-23-4**X70K**	Kevlar® (Green), .070 Thick
SX-23-4**X70T**	Tan, .070 Thick
SX-23-4**J**	LockJoint™, Red, .040-.045 Thick
SX-23-4**JC**	LockJoint™, Carbon, .040-.045 Thick
SX-23-4**JHC**	LockJoint™, High Carbon, .040-.045 Thick
SX-23-4**JK**	LockJoint™, Kevlar® (Green), .040-.045 Thick
SX-23-4**JT**	LockJoint™, Tan , .040-.045 Thick
SX-23-4**JX70**	LockJoint™, Red, .070 Thick
SX-23-4**JX70C**	LockJoint™, Carbon, .070 Thick
SX-23-4**JX70HC**	LockJoint™, High Carbon, .070 Thick
SX-23-4**JX70K**	LockJoint™,, Kevlar®,(Green), ..070 Thick
SX-23-4**JX70T**	LockJoint™, Tan , .070 Thick
FX-23-82**SK**	With Cut -Outs, Kevlar®, Green, .045 Thick
FX-23-82**SX70K**	With Cut -Outs, Kevlar®, Green, .070 Thick
FX-23-80**MK**	Modulated Grooved, Kevlar®, Green, .045 Thick
FX-23-80**MX70K**	Modulated Grooved, Kevlar®, Green, .070 Thick

LOCKUP LININGS LISTED BY OUTSIDE DIAMETER

Suffix Code Reminder: X70 for .070" Thickness; T - Tan, C - Carbon, HC - High Carbon, K - KEVLAR®, J - LockJoint™

Basic Tri Part #	O.D. (inch)	I.D. (inch)	O.D. (mm)	I.D. (mm)
SX-23-SS45	**2.188**	**1.563**	**55.6**	**39.7**
SX-23-LS45	**2.875**	**2.375**	**73.0**	**60.3**
TX-23-20	**4.938**	**4.438**	**125.4**	**112.7**
FX-23-17	**6.813**	**6.438**	**173.0**	**163.5**
PX-23-22	**7.283**	6.300	**185.0**	160.0
RX-23-1	**7.500**	6.688	**190.5**	169.9
JX-23-41	**7.677**	6.300	**195.0**	160.0
RX-23-2	**7.930**	7.100	**201.4**	180.3
SX-23-42	**8.000**	6.375	**203.2**	161.9
SX-23-51	**8.062**	7.250	**204.8**	184.2
FX-23-74	**8.080**	6.930	**205.0**	176.0
FX-23-74M	**8.080**	6.930	**205.0**	176.0
FX-23-74S	**8.080**	6.930	**205.0**	176.0
SX-23-62	**8.150**	6.772	**207.0**	172.0
JX-23-37	**8.250**	7.125	**209.6**	181.0
YX-23-2	**8.250**	7.250	**209.5**	184.2
FX-23-47M	**8.250**	7.281	**209.6**	184.9
PX-23-24	**8.250**	7.293	**209.6**	185.2
JX-23-24	**8.250**	7.625	**209.6**	193.7
JX-23-1	**8.365**	7.550	**212.5**	191.8
SX-23-63	**8.430**	6.665	**214.1**	169.3
YX-23-19	**8.500**	7.250	**215.9**	184.2
SX-23-58	**8.500**	7.500	**215.9**	190.5

Basic Tri Part #	O.D. (inch)	I.D. (inch)	O.D. (mm)	I.D. (mm)
PX-23-26	**8.617**	7.335	**218.9**	186.3
PX-23-25M	**8.645**	7.325	**219.6**	186.1
SX-23-50	**8.750**	7.562	**222.3**	192.1
NX-23-1	**8.750**	7.750	**222.3**	196.9
FX-23-85	**8.854**	7.591	**224.9**	192.8
FX-23-71	**8.875**	7.375	**222.3**	187.3
SX-23-31	**8.875**	8.000	**225.4**	203.2
YX-23-25	**8.900**	7.635	**226.1**	193.9
FX-23-87	**9.000**	7.500	**228.6**	190.5
SX-23-13	**9.000**	7.750	**228.6**	196.9
FX-23-29	**9.000**	7.875	**228.6**	200.0
FX-23-29M	**9.000**	7.875	**228.6**	200.0
TX-23-6	**9.000**	8.000	**228.6**	203.2
JX-23-3	**9.000**	8.250	**228.6**	209.6
TX-23-5	**9.125**	7.625	**231.8**	193.7
TX-23-15	**9.125**	7.750	**231.8**	196.9
TX-23-16	**9.125**	7.813	**231.8**	198.5
FX-23-24	**9.125**	8.063	**231.8**	204.8
FX-23-24M	**9.125**	8.063	**231.8**	204.8
NX-23-6	**9.125**	8.125	**231.8**	206.4
PX-23-20	**9.150**	7.875	**232.4**	200.0
SX-23-48	**9.188**	7.500	**233.4**	190.5
JX-23-20	**9.240**	8.313	**234.7**	211.2

LOCKUP LININGS LISTED BY OUTSIDE DIAMETER

Suffix Code Reminder: X70 for .070" Thickness; T - Tan, C - Carbon, HC - High Carbon, K - KEVLAR®, J - LockJoint™

Basic Tri Part #	O.D. (inch)	I.D. (inch)	O.D. (mm)	I.D. (mm)
JX-23-8	**9.250**	7.875	**235.0**	200.0
FX-23-6	**9.250**	8.125	**235.0**	206.4
TX-23-21	**9.313**	8.250	**236.6**	209.6
PX-23-11	**9.360**	8.380	**237.7**	212.9
TX-23-12	**9.375**	7.750	**238.1**	196.9
YX-23-12	**9.375**	7.875	**238.1**	200.0
FX-23-18	**9.375**	8.125	**238.1**	206.4
HX-23-10M	**9.430**	8.220	**239.5**	208.8
PX-23-12M	**9.438**	8.141	**239.7**	206.8
FX-23-82S	**9.500**	8.250	**241.8**	209.6
PX-23-9	**9.500**	8.250	**241.3**	209.6
NX-23-2	**9.500**	8.500	**241.3**	215.9
JX-23-15	**9.563**	8.625	**242.9**	219.1
TX-23-18	**9.625**	7.625	**244.5**	193.7
TX-23-24	**9.625**	7.875	**244.5**	200.0
TX-23-9	**9.625**	8.000	**244.5**	203.2
FX-23-25	**9.625**	8.063	**244.5**	204.8
FX-23-25M	**9.625**	8.063	**244.5**	204.8
FX-23-63	**9.625**	8.375	**244.5**	212.7
NX-23-10	**9.625**	8.438	**244.5**	214.3
FX-23-19	**9.688**	8.250	**246.1**	209.6
SX-23-70M	**9.694**	8.675	**246.2**	220.3
PX-23-19	**9.710**	8.190	**246.6**	208.0

Basic Tri Part #	O.D. (inch)	I.D. (inch)	O.D. (mm)	I.D. (mm)
FX-23-57	**9.725**	8.250	**247.0**	209.6
FX-23-89	**9.750**	8.125	**247.7**	206.4
YX-23-3	**9.750**	8.250	**247.7**	209.6
NX-23-8	**9.750**	8.313	**247.7**	211.2
JX-23-33	**9.750**	9.000	**247.7**	228.6
SX-23-61	**9.813**	8.562	**249.3**	217.5
JX-23-32	**9.813**	8.813	**249.3**	223.9
JX-23-22	**9.875**	8.750	**250.8**	222.3
NX-23-9	**9.875**	8.875	**250.8**	225.4
FX-23-83S	**9.880**	8.750	**251.0**	222.3
TX-23-25	**9.921**	7.921	**252.0**	201.2
TX-23-35	**9.930**	8.800	**252.2**	223.5
TX-23-35M	**9.930**	8.800	**252.2**	223.5
JX-23-10	**9.938**	9.000	**252.4**	228.6
YX-23-1	**10.000**	8.250	**254.0**	209.6
PX-23-13	**10.000**	8.400	**254.0**	213.4
YX-23-18	**10.000**	8.500	**254.0**	215.9
TX-23-17	**10.000**	8.750	**254.0**	222.3
TX-23-17M	**10.000**	8.750	**254.0**	222.3
NX-23-7	**10.000**	9.000	**254.0**	228.6
YX-23-10	**10.063**	8.500	**255.6**	215.9
SX-23-55	**10.100**	7.500	**256.5**	190.5
TX-23-13	**10.125**	8.125	**257.2**	206.4

LOCKUP LININGS LISTED BY OUTSIDE DIAMETER

Suffix Code Reminder: X70 for .070" Thickness; T - Tan, C - Carbon, HC - High Carbon, K - KEVLAR®, J - LockJoint™

Basic Tri Part #	O.D. (inch)	I.D. (inch)	O.D. (mm)	I.D. (mm)
YX-23-8	**10.125**	8.25	**257.2**	209.6
YX-23-20	**10.125**	8.688	**257.2**	220.7
FX-23-65	**10.125**	9.000	**257.2**	228.6
NX-23-5	**10.125**	9.125	**257.2**	231.8
YX-23-11	**10.126**	8.626	**257.2**	219.1
PX-23-10	**10.150**	9.360	**257.8**	237.7
YX-23-24	**10.188**	8.730	**258.8**	221.7
FX-23-70M	**10.200**	8.960	**259.1**	227.6
YX-23-22	**10.250**	8.625	**260.4**	219.1
NX-23-12	**10.250**	9.250	**260.4**	235.0
TX-23-11	**10.313**	8.750	**261.9**	222.3
SX-23-52	**10.313**	9.250	**262.0**	235.0
YX-23-7	**10.375**	8.625	**263.5**	219.1
NX-23-11	**10.375**	9.250	**263.5**	235.0
SX-23-32	**10.375**	9.375	**263.5**	238.1
FX-23-80M	**10.400**	9.200	**264.2**	233.7
FX-23-80S	**10.400**	9.200	**264.2**	233.7
FX-23-13	**10.500**	8.625	**266.7**	219.1
YX-23-21	**10.500**	9.000	**266.7**	228.6
TX-23X	**10.500**	9.125	**266.7**	231.8
TX-23-19	**10.500**	9.188	**266.7**	233.4
TX-23-19M	**10.500**	9.188	**266.7**	233.4
FX-23-59	**10.500**	9.375	**266.7**	238.1

Basic Tri Part #	O.D. (inch)	I.D. (inch)	O.D. (mm)	I.D. (mm)
FX-23-67	**10.500**	9.500	**266.7**	241.3
TX-22X	**10.563**	9.250	**268.3**	235.0
FX-23-26M	**10.563**	9.313	**268.3**	236.5
FX-23-26	**10.563**	9.313	**268.3**	236.6
TX-23-14	**10.750**	9.000	**273.1**	228.6
TX-23-32	**10.750**	9.125	**273.1**	231.8
TX-23-4	**10.750**	9.250	**273.1**	235.0
JX-23-23	**10.750**	9.500	**273.1**	241.3
NX-23-13	**10.750**	9.625	**273.1**	244.5
FX-23-49	**10.850**	9.800	**275.6**	248.9
YX-23-17	**11.000**	9.563	**279.4**	242.9
FX-23-52	**11.125**	9.813	**282.6**	249.3
SX-23-4	**11.125**	10.000	**282.6**	254.0
FX-23-23	**11.200**	10.400	**284.5**	264.2
SX-23-65	**11.233**	10.135	**285.3**	257.4
FX-23-86	**11.250**	9.700	**285.8**	246.4
FX-23-28	**11.250**	10.000	**285.8**	254.0
FX-23-28M	**11.250**	10.000	**285.8**	254.0
FX-23-27	**11.375**	10.000	**288.9**	254.0
FX-23-10	**11.500**	10.000	**292.1**	254.0
SX-23-69	**11.500**	10.250	**292.1**	260.4
SX-23-57	**11.570**	10.000	**293.9**	254.0
SX-23-25	**11.580**	10.313	**294.1**	262.0

LOCKUP LININGS LISTED BY OUTSIDE DIAMETER

Suffix Code Reminder: X70 for .070" Thickness; T - Tan, C - Carbon, HC - High Carbon, K - KEVLAR®, J - LockJoint™

Basic Tri Part #	O.D. (inch)	I.D. (inch)	O.D. (mm)	I.D. (mm)
FX-23-15	**11.625**	9.750	**295.3**	247.7
FX-23-12	**11.625**	10.000	**295.3**	254.0
SX-23-47	**11.625**	10.375	**295.3**	263.5
TX-23-26	**11.654**	10.157	**296.0**	258.0
MX-23-1	**11.688**	10.000	**296.9**	254.0
SX-23-66	**11.750**	10.250	**298.5**	260.4
SX-23-54	**12.340**	10.750	**313.4**	273.1
SX-23-40	**12.344**	9.906	**313.5**	251.6
SX-23-44	**12.344**	10.250	**313.5**	260.4
SX-23-49	**12.500**	10.750	**317.5**	273.1
TX-23-33	**12.562**	11.625	**319.1**	295.3
SX-23-35	**12.625**	10.688	**320.7**	271.5
SX-23-38	**13.000**	10.375	**330.2**	263.5
SX-23-46	**13.500**	11.508	**342.9**	292.1
SX-23-56	**13.625**	11.500	**346.1**	292.1
PX-23-17	**10.250**	8.785	**260.4**	223.1
SX-23-61	**9.813**	8.562	**249.3**	217.5
YX-23-23K	**7.430**	6.300	**188.7**	160.0
YX-23-70M	**9.845**	8.675	**250.1**	220.3

FLOATING RINGS LISTED BY OUTSIDE DIAMETER

(.070” THICKNESS)

PART #	MAKE	APPLICATION	O. D.	I. D.
JX-23-4	ATCO-DATSUN, NISSAN, MITSUBISHI	L4N71B (Early & Late)	9-5/8”	8”
JX-23-9	ATCO-DATSUN, NISSAN, MITSUBISHI	Nissan RL3FO1A F.W.D.	9-3/4”	7-17/32”
TX-26-9	CHRYSLER	9-1/2" F.W.D., A404, A604	9-11/16”	7.97”
JX-23-2	ATCO-DATSUN, NISSAN, MITSUBISHI	L3N71B	9-1/8”	7-7/32”
TX-26-7	ATCO-DATSUN, NISSAN, MITSUBISHI	Mitsubishi KM-175-5, 177	9-1/4”	7-7/8”
SX-23-14	GENERAL MOTORS	TH125 (245mm)	9-1/2”	8”
TX-26-11	CHRYSLER	10" (254mm) F.W.D.	10-5/16”	8-3/4”
TX-26-4	CHRYSLER	10-3/4" R.W.D., 904	10-3/4”	9-1/4”
FX-23-7	FORD	AXOD	10-11/32”	7”
JX-23-12	ATCO-DATSUN, NISSAN, MITSUBISHI	Jatco 9-3/8"	10-11/32”	8-5/16”
FX-23-3	FORD	A4LD	10-1/4”	8-1/8”
SX-23-11	GENERAL MOTORS	TH350 (298mm)	11-21/32”	9-1/2”

WOVEN CARBON LININGS

Tri Component Products is pleased to introduce Woven Carbon Friction Linings.

True Carbon Woven Linings offer OEM compliance for all GM and Ford continuous slip applications.

Tri's Woven Carbon Friction Linings offer stable coefficient of friction and last well over 200,000 miles while still maintaining performance characteristics. Our material is a marvel of engineering and can offer for the first time seamless integration into your bonding operation. No change is required in preparation or bonding procedures.

Tri Product Highlights:

- Low Wear Over Lifetime
- Stable Friction Coefficient
- Rapid Heat Dissipation
- High Compression Strength
- Thermal Stability

Tri Component has been successfully engineering and supplying problem solving solutions since 1967.

Tri Part #	Sonnax Part #	O. D. (inch)	I. D. (inch)	Th. (inch)	O. D. (mm)	I. D. (mm)	Th. (mm)
FX-23-52WC	**S20750WC**	11.125	9.813	0.020	282.6	249.3	0.5
NX-23-12WC	**S20930WC**	10.250	9.250	0.020	260.4	235.0	0.5
NX-23-5WC	**S20960WC**	10.125	9.125	0.020	257.2	231.8	0.5
PX-23-9WC	**S20300WC**	9.500	8.250	0.020	241.3	209.6	0.5
SX-23-13WC	**S20320WC**	9.000	7.750	0.020	228.6	196.9	0.5
SX-23-4WC	**S20320WC**	11.125	10.000	0.020	282.6	254.0	0.5
SX-23-61WC	**S20680WC**	9.813	8.562	0.020	249.3	217.5	0.5
FX-23-91WC	**S20290WC**	9.560	8.375	0.020	242.8	212.7	0.5
FX-23-92WC	**S20636WC**	9.440	8.200	0.020	239.8	208.3	0.5

LOCKUP LININGS LISTED BY TRI PART

Suffix Code Reminder: T - Tan, C - Carbon, HC - High Carbon, K - KEVLAR®, J - LockJoint™

Tri Part #	Raybestos Part #	BW / Sonnax Part #	O.D. (")	I.D. (")	Th. (")	Make	Application
FX-23-10K	R445010K	B45010HTE	11.500	10.000	0.045	FORD	E4OD
FX-23-10X70K	R475010K	B66010HTE	11.500	10.000	0.070	FORD	E4OD
FX-23-12K	R445400K	N/A	11.625	10.000	0.045	FORD	E4OD
FX-23-12X70K	R475400K	N/A	11.625	10.000	0.070	FORD	E4OD
FX-23-13K	R445030K	B45030HTE	10.500	8.625	0.045	BORG WARNER	BTR LE85
FX-23-13X70K	N/A	N/A	10.500	8.625	0.070	BORG WARNER	BTR LE85
FX-23-15K	N/A	N/A	11.625	9.750	0.045	FORD	Miscellaneous
FX-23-15X70K	N/A	N/A	11.625	9.750	0.070	FORD	Miscellaneous
FX-23-17K	R445170K	B45170HTE	6.813	6.438	0.045	FORD	A4LD MULTI-CLUTCH 4.0
FX-23-17X70K	R475170K	B66170HTE	6.813	6.438	0.070	FORD	A4LD MULTI-CLUTCH 4.0
FX-23-18K	R445100K	B45100HTE	9.375	8.125	0.045	FORD	A4LD MULTI-CLUTCH 4.0
FX-23-18X70K	R475100K	N/A	9.375	8.125	0.070	FORD	A4LD MULTI-CLUTCH 4.0
FX-23-19T	R445380T	B45380HTE	9.688	8.250	0.045	FORD	A4LD, 4R55E
FX-23-19X70K	N/A	N/A	9.688	8.250	0.070	FORD	A4LD, 4R55E
FX-23-23K	N/A	N/A	11.200	10.400	0.045	FORD	E4OD
FX-23-23X70K	N/A	N/A	11.200	10.400	0.070	FORD	E4OD
FX-23-24MK	N/A	N/A	9.125	8.063	0.045	FORD	CD4E
FX-23-24T	R445460T	B45540HTE	9.125	8.063	0.045	FORD	CD4E
FX-23-24X70K	N/A	N/A	9.125	8.063	0.070	FORD	CD4E
FX-23-24X70MK	N/A	N/A	9.125	8.063	0.070	FORD	CD4E
FX-23-25K	N/A	N/A	9.625	8.063	0.045	FORD	AXOD / AXODE, CD4E, CD4E 9-1/4”
FX-23-25MK	N/A	N/A	9.625	8.063	0.045	FORD	AXOD / AXODE, CD4E, CD4E 9-1/4”
FX-23-25X70K	N/A	N/A	9.625	8.063	0.070	FORD	AXOD / AXODE, CD4E, CD4E 9-1/4”

LOCKUP LININGS LISTED BY TRI PART

Suffix Code Reminder: T - Tan, C - Carbon, HC - High Carbon, K - KEVLAR®, J - LockJoint™

Tri Part #	Raybestos Part #	BW / Sonnax Part #	O.D. (")	I.D. (")	Th. (")	Make	Application
FX-23-25X70MK	N/A	N/A	9.625	8.063	0.070	FORD	AXOD / AXODE, CD4E, CD4E 9-1/4”
FX-23-26K	R445190K	B45190HTE	10.563	9.313	0.045	FORD	AOD-E, 4R70W
FX-23-26MK	N/A	N/A	10.563	9.313	0.045	FORD	AOD-E, 4R70W
FX-23-26X70K	R445190K	B66190HTE	10.563	9.313	0.070	FORD	AOD-E, 4R70W
FX-23-26X70MK	N/A	N/A	10.563	9.313	0.070	FORD	AOD-E, 4R70W
FX-23-27K	N/A	N/A	11.375	10.000	0.045	FORD	E4OD
FX-23-27X70K	N/A	N/A	11.375	10.000	0.070	FORD	E4OD
FX-23-28K	R445551K	B45551HTE	11.250	10.000	0.045	FORD	AOD-E, 4R70W
FX-23-28MK	N/A	N/A	11.250	10.000	0.045	FORD	AOD-E, 4R70W
FX-23-28X70K	R475551K	B66551HTE	11.250	10.000	0.070	FORD	AOD-E, 4R70W
FX-23-28X70MK	N/A	N/A	11.250	10.000	0.070	FORD	AOD-E, 4R70W
FX-23-29K	R445470K	N/A	9.000	7.875	0.045	FORD	AX4S / AX4N
FX-23-29MK	N/A	N/A	9.000	7.875	0.045	FORD	AX4S / AX4N
FX-23-29X70K	R475470K	N/A	9.000	7.875	0.070	FORD	AX4S / AX4N
FX-23-29X70MK	N/A	N/A	9.000	7.875	0.070	FORD	AX4S / AX4N
FX-23-47MK	N/A	N/A	8.250	7.281	0.045	FORD	5R55N / 5R55S / 5R55W
FX-23-47X70MK	N/A	N/A	8.250	7.281	0.070	FORD	5R55N / 5R55S / 5R55W
FX-23-49K	R445630K	N/A	10.850	9.800	0.045	FORD	4R100, 5R110W, Early
FX-23-49X70K	R475630K	N/A	10.850	9.800	0.070	FORD	4R100, 5R110W, Early
FX-23-52HC	R445440HC	B45750HTS	11.125	9.813	0.045	FORD	4R100, 5R110W, Early
FX-23-52X70HC	R475440HC	B66750HTS	11.125	9.813	0.070	FORD	4R100, 5R110W, Early
FX-23-57K	R445070K	B45070HTE	9.725	8.250	0.045	FORD / TOYOTA / CHRYSLER	4R55E, 5R55E Late, A4LD / A140 / 10" LU

LOCKUP LININGS LISTED BY TRI PART

Suffix Code Reminder: T - Tan, C - Carbon, HC - High Carbon, K - KEVLAR®, J - LockJoint™

Tri Part #	Raybestos Part #	BW / Sonnax Part #	O.D. (")	I.D. (")	Th. (")	Make	Application
FX-23-57X70K	R475070K	B66070HTE	9.725	8.250	0.070	FORD / TOYOTA / CHRYSLER	4R55E, 5R55E Late, A4LD / A140 / 10" LU
FX-23-59K	N/A	B45190HTE	10.500	9.375	0.045	CHRYSLER / FORD / JATCO	10-3/4" LU / AODE, 4R70W, 4R75W / RE4R03A, 250mm
FX-23-59X70K	N/A	B66190HTE	10.500	9.375	0.070	CHRYSLER / FORD / JATCO	10-3/4" LU / AODE, 4R70W, 4R75W / RE4R03A, 250mm
FX-23-63K	R445290K	B45290HTE	9.625	8.375	0.045	FORD / MITSUBISHI	A4LD, 4R55E, 6F35 / F4/R4A51, F5/R5A51
FX-23-63X70K	R475290K	B66290HTE	9.625	8.375	0.070	FORD / MITSUBISHI	A4LD, 4R55E, 6F35 / F4/R4A51, F5/R5A51
FX-23-65K	N/A	B45960HTE	10.125	9.000	0.045	FORD / GM / HONDA	HD3696-8-2 / 6L90 (Captive Clutch) / MPYA
FX-23-65X70K	N/A	B66960HTE	10.125	9.000	0.070	FORD / GM / HONDA	HD3696-8-2 / 6L90 (Captive Clutch) / MPYA
FX-23-67HC	N/A	N/A	10.500	9.500	0.045	FORD	F630, 4R70W
FX-23-67X70HC	N/A	N/A	10.500	9.500	0.070	FORD	F630, 4R70W
FX-23-6K	R445120K	B45120HTE	9.250	8.125	0.045	FORD	AXOD / AXODE
FX-23-6X70K	R475120K	B66120HTE	9.250	8.125	0.070	FORD	AXOD / AXODE
FX-23-70MK	N/A	N/A	10.200	8.960	0.045	N/A	N/A
FX-23-70X70MK	N/A	N/A	10.200	8.960	0.070	N/A	N/A
FX-23-71HC	N/A	N/A	8.875	7.375	0.045	FORD	5R55N/S/W, AX4N
FX-23-71X70HC	N/A	N/A	8.875	7.375	0.070	FORD	5R55N/S/W, AX4N
FX-23-74HC	N/A	B45606HTS	8.080	6.930	0.045	FORD	6R60, 6R75W
FX-23-74MK	N/A	N/A	8.080	6.930	0.045	FORD	6R60, 6R75W
FX-23-74SHC	N/A	B45606HTS	8.080	6.930	0.045	FORD	6R60, 6R75W
FX-23-74X70HC	N/A	B66606HTS	8.080	6.930	0.070	FORD	6R60, 6R75W
FX-23-74X70MK	N/A	N/A	8.080	6.930	0.070	FORD	6R60, 6R75W

LOCKUP LININGS LISTED BY TRI PART

Suffix Code Reminder: T - Tan, C - Carbon, HC - High Carbon, K - KEVLAR®, J - LockJoint™

Tri Part #	Raybestos Part #	BW / Sonnax Part #	O.D. (")	I.D. (")	Th. (")	Make	Application
FX-23-74X70SHC	N/A	B66606HTS	8.080	6.930	0.070	FORD	6R60, 6R75W
FX-23-80MK	N/A	N/A	10.400	9.200	0.045	FORD	6R80, 280mm (Late)
FX-23-80SK	N/A	B45955HTE	10.400	9.200	0.045	FORD	6R80, 280mm (Late)
FX-23-80X70MK	N/A	N/A	10.400	9.200	0.070	FORD	6R80, 280mm (Late)
FX-23-80X70SK	N/A	N/A	10.400	9.200	0.070	FORD	6R80, 280mm (Late)
FX-23-82SK	N/A	B45935HTE	9.500	8.250	0.045	FORD	6R80, 280mm (Early)
FX-23-82X70SK	N/A	N/A	9.500	8.250	0.070	FORD	6R80, 280mm (Early)
FX-23-83SK	N/A	B45950HTE	9.880	8.750	0.045	FORD	6R80, 260mm (Late)
FX-23-83X70SK	R475050K	N/A	9.880	8.750	0.070	FORD	6R80, 260mm (Late)
FX-23-85HC	N/A	N/A	8.854	7.591	0.045	FORD	MISCELLANEOUS
FX-23-85X70HC	N/A	N/A	8.854	7.591	0.070	FORD	MISCELLANEOUS
FX-23-86K	R445410K	B45410HTE	11.250	9.700	0.045	FORD	4R100, 5R110W Early
FX-23-86X70K	R475410K	N/A	11.250	9.700	0.070	FORD	4R100, 5R110W Early
FX-23-87HC	R445570HC	N/A	9.000	7.500	0.045	FORD	A4LDE, 4R/5R55E, 4F50N (AX4N), 5R55N/S/W
FX-23-88X70T	R475340T	B66340HTE	9.812	9.063	0.070	JATCO NISSAN	RE/L4F02A-RE/ L4R01A
FX-23-89K	R445080K	B45080HTE	9.750	8.125	0.045	FORD	AXOD/E, CD4E, 9-1/4 & 10-1/4
HX-23-10MK	N/A	N/A	9.430	8.220	0.045	MERCEDES	722.8 FWD, 7 SPEED NA-CLASS, B-CLASS
HX-23-10X70MK	N/A	N/A	9.430	8.220	0.070	MERCEDES	722.8 FWD, 7 SPEED A-CLASS, B-CLASS
JX-23-10K	R445370K	B45064HTE	9.938	9.000	0.045	ZF/ CHRYSLER / JATCO	ZF4HP22 / JEEP A999 / RL4F02A DA-11
JX-23-10X70K	R475370K	B66064HTE	9.938	9.000	0.070	ZF/ CHRYSLER / JATCO	ZF4HP22 / JEEP A999 / RL4F02A DA-11
JX-23-15K	N/A	N/A	9.563	8.625	0.045	MAZDA	G4A-EL, Late, DA-29, DA-34

LOCKUP LININGS LISTED BY TRI PART

Suffix Code Reminder: T - Tan, C - Carbon, HC - High Carbon, K - KEVLAR®, J - LockJoint™

Tri Part #	Raybestos Part #	BW / Sonnax Part #	O.D. (")	I.D. (")	Th. (")	Make	Application
JX-23-15X70K	N/A	N/A	9.563	8.625	0.070	MAZDA	G4A-EL, Late, DA-29, DA-34
JX-23-1K	R445840K	N/A	8.365	7.550	0.045	JATCO	L3N71B, DA-5
JX-23-1X70K	R475840K	N/A	8.374	7.000	0.070	JATCO	L3N71B, DA-5
JX-23-20K	R445110K	B45110HTE	9.240	8.313	0.045	SUBARU / JATCO	RE4R01A / RL3F01A FWD, DA-6, RL4F02A DA-13
JX-23-20X70T	R475110T	B66110HTE	9.240	8.313	0.070	SUBARU / JATCO	RE4R01A / RL3F01A FWD, DA-6, RL4F02A DA-13
JX-23-22K	R445050K	B45050HTE	9.875	8.750	0.045	JATCO / MITSUBISHI	RE4R01A, DA-18, DA-48 / KM-175, KM-176
JX-23-22X70K	R475050K	B66050HTE	9.875	8.750	0.070	JATCO / MITSUBISHI	RE4R01A, DA-18, DA-48 / KM-175, KM-176
JX-23-23K	R445020K	B45020HTE	10.750	9.500	0.045	JATCO	RE4R03A, DA-30 280mm
JX-23-23X70K	R475020K	B66020HTE	10.750	9.500	0.070	JATCO	RE4R03A, DA-30 280mm
JX-23-24K	N/A	N/A	8.250	7.625	0.045	JATCO	NISSAN MICRA, DA-35
JX-23-24X70K	N/A	N/A	8.250	7.625	0.070	JATCO	NISSAN MICRA, DA-35
JX-23-32K	R445050K	B45050HTE	9.813	8.813	0.045	GM / JATCO / ZF	8L90 / RE4F04A/V, DA-37, DA-39, JF010E (RE0F09A), JF506E (with sensor ring), RE4R01A / ZF4HP16, ZF5HP19 (Single Friction)
JX-23-32X70K	R475050K	B66050HTE	9.813	8.813	0.070	GM / JATCO / ZF	8L90 / RE4F04A/V, DA-37, DA-39, JF010E (RE0F09A), JF506E (with sensor ring), RE4R01A / ZF4HP16, ZF5HP19 (Single Friction)
JX-23-33K	R445060K	B45060HTE	9.750	9.000	0.045	JATCO	RL4F02A, DA-13, DA-11
JX-23-33X70K	R475060K	B66060HTE	9.750	9.000	0.070	JATCO	RL4F02A, DA-13, DA-11
JX-23-37K	R445160K	B45160HTE	8.250	7.125	0.045	JATCO	L3N71B
JX-23-37X70K	R475160K	B66160HTE	8.250	7.125	0.070	JATCO	L3N71B

LOCKUP LININGS LISTED BY TRI PART

Suffix Code Reminder: T - Tan, C - Carbon, HC - High Carbon, K - KEVLAR®, J - LockJoint™

Tri Part #	Raybestos Part #	BW / Sonnax Part #	O.D. (")	I.D. (")	Th. (")	Make	Application
JX-23-3K	R445310K	B45310HTE	9.000	8.250	0.045	GM / JATCO	245mm LU / L4N71B RWD, DA-8
JX-23-3X70T	R475310T	B66310HTE	9.000	8.250	0.070	GM / JATCO	245mm LU / L4N71B RWD, DA-8
JX-23-41K	N/A	N/A	7.677	6.300	0.045	SUZUKI	JIMNY
JX-23-41X70K	N/A	N/A	7.677	6.300	0.070	SUZUKI	JIMNY
JX-23-8K	R445520K	B45520HTE	9.250	7.875	0.045	CHRYSLER / MAZDA / FORD / TOYOTA	9-1/2" LU, A-470, A-670, A-604, FWD / G4A / FORD 4EAT / A540E
JX-23-8X70K	R475520K	B66520HTE	9.250	7.875	0.070	CHRYSLER / MAZDA / FORD / TOYOTA	9-1/2" LU, A-470, A-670, A-604, FWD / G4A / FORD 4EAT / A540E
MX-23-1K	N/A	N/A	11.688	10.000	0.045	ALLISON	MD 3000 SERIES
MX-23-1X70K	N/A	N/A	11.688	10.000	0.070	ALLISON	MD 3000 SERIES
NX-23-10K	R445290K	B45290HTE	9.625	8.438	0.045	HONDA	Miscellaneous
NX-23-10X70K	R475290K	B66290HTE	9.625	8.438	0.070	HONDA	Miscellaneous
NX-23-11K	N/A	B45965HTE	10.375	9.250	0.045	HONDA	MDKA, MDRA (MDX)
NX-23-11X70K	N/A	B66965HTE	10.375	9.250	0.070	HONDA	MDKA, MDRA (MDX)
NX-23-12K	R445810K	B45930HTE	10.250	9.250	0.045	HONDA / FORD / GM	40-25 / 6F50/6F55 / 6T70/6T75
NX-23-12X70K	R475810K	B66930HTE	10.250	9.250	0.070	HONDA / FORD / GM	40-25 / 6F50/6F55 / 6T70/6T75
NX-23-13HC	N/A	N/A	10.750	9.625	0.045	HONDA	Miscellaneous
NX-23-13X70HC	N/A	N/A	10.750	9.625	0.070	HONDA	Miscellaneous
NX-23-1K	R445150K	B45150HTE	8.750	7.750	0.045	HONDA / ZF	AS, F4 / ZF4HP22 BMW (BABY, 318), 254mm, BM-12
NX-23-1X70K	R475150K	B66150HTE	8.750	7.750	0.070	HONDA / ZF	AS, F4 / ZF4HP22 BMW (BABY, 318), 254mm, BM-12
NX-23-2K	R445090K	B45090HTE	9.500	8.500	0.045	HONDA / VW / FORD / MAZDA	MISCEL., 96 LU (01M) / 4F27E (Focus) / FN4A-EL, G4A-EL & 4EAT-G, L/S, G4A-EL, Late

LOCKUP LININGS LISTED BY TRI PART

Suffix Code Reminder: T - Tan, C - Carbon, HC - High Carbon, K - KEVLAR®, J - LockJoint™

Tri Part #	Raybestos Part #	BW / Sonnax Part #	O.D. (")	I.D. (")	Th. (")	Make	Application
NX-23-2X70K	R475090K	B66090HTE	9.500	8.500	0.070	HONDA / VW / FORD / MAZDA	MISCEL., 96 LU (01M) / 4F27E (Focus) / FN4A-EL, G4A-EL & 4EAT-G, L/S, G4A-EL, Late
NX-23-5K	N/A	B45930HTE	10.125	9.125	0.045	FORD / GM / HONDA	6F50, 6F55 / 6T70, 6T75 / G4
NX-23-5X70K	N/A	B66930HTE	10.125	9.125	0.070	FORD / GM / HONDA	6F50/6F55, 6T70/6T75, G4
NX-23-6K	R445540K	B45540HTE	9.125	8.125	0.045	HONDA	LU
NX-23-6X70K	R475540K	N/A	9.125	8.125	0.070	HONDA	LU
NX-23-7K	R445370K	B45370HTE	10.000	9.000	0.045	HONDA / MAZDA / FORD	HO-14 /MPYA /FNR5 (FS5A-EL)
NX-23-7X70K	R475370K	B66370HTE	10.000	9.000	0.070	HONDA / MAZDA / FORD	HO-14 /MPYA /FNR5 (FS5A-EL)
NX-23-8K	R445071K	B45070HTE	9.750	8.313	0.045	HYUNDAI / FORD / CHRYSLER / TOYOTA	SONATA / 4R55E, 5R55E Late, A4LD / 10" LU / A140
NX-23-8X70K	R475071K	B66070HTE	9.750	8.313	0.070	HYUNDAI / FORD / CHRYSLER / TOYOTA	SONATA / 4R55E, 5R55E Late, A4LD / 10" LU / A140
NX-23-9K	R445450K	B45450HTE	9.875	8.875	0.045	HONDA	B7TA, B7VA, B7YA
NX-23-9X70K	R475450K	B66450HTE	9.875	8.875	0.070	HONDA	B7TA, B7VA, B7YA
PX-23-10K	R445330K	B45330HTE	10.150	9.360	0.045	ZF	ZF5HP30
PX-23-10X70K	R475330K	B66330HTE	10.150	9.360	0.070	ZF	ZF5HP30
PX-23-11HC	R445024HC	B45690HTS	9.360	8.380	0.045	FORD / ZF	FOCUS FN / ZF5HP24
PX-23-11X70HC	R475024HC	N/A	9.360	8.380	0.070	FORD / ZF	FOCUS FN / ZF5HP24
PX-23-12MK	N/A	N/A	9.438	8.141	0.045	ZF	ZF5HP19FL
PX-23-12X70MK	N/A	N/A	9.438	8.141	0.070	ZF	ZF5HP19FL
PX-23-13K	N/A	N/A	10.000	8.400	0.045	ZF	ZF4HP20
PX-23-13X70K	N/A	N/A	10.000	8.400	0.070	ZF	ZF4HP20

LOCKUP LININGS LISTED BY TRI PART

Suffix Code Reminder: T - Tan, C - Carbon, HC - High Carbon, K - KEVLAR®, J - LockJoint™

Tri Part #	Raybestos Part #	BW / Sonnax Part #	O.D. (")	I.D. (")	Th. (")	Make	Application
PX-23-19HC	R445070HC	B45070HTS	9.710	8.190	0.045	FORD / TOYOTA / ZF	4R55E, 5R55E Late, A4LD / A140 / ZF6HP26 260mm
PX-23-19X70HC	R475070HC	B66070HTS	9.710	8.190	0.070	FORD / TOYOTA / ZF	4R55E, 5R55E Late, A4LD / A140 / ZF6HP26 260mm
PX-23-20HC	N/A	B45740HTS	9.150	7.875	0.045	ZF	ZF6HP19, 245mm
PX-23-20X70HC	N/A	N/A	9.150	7.875	0.070	ZF	ZF6HP19, 245mm
PX-23-22HC	N/A	N/A	7.283	6.300	0.045	ZF	ZF6HP19, 255mm, 245mm, ZF6HP26, 255mm
PX-23-22X70HC	N/A	N/A	7.283	6.300	0.070	ZF	ZF6HP19, 255mm, 245mm, ZF6HP26, 255mm
PX-23-24K	R445490K	N/A	8.250	7.293	0.045	ZF	ZF6HP26 275mm
PX-23-24X70K	R475490K	N/A	8.250	7.293	0.070	ZF	ZF6HP26 275mm
PX-23-25MK	N/A	N/A	8.645	7.325	0.045	ZF / GM	ZF6HP19 245mm LuK / 6L45
PX-23-25X70MK	N/A	N/A	9.500	6.463	0.070	ZF / GM	ZF6HP19 245mm LuK / 6L45
PX-23-26T	N/A	N/A	8.617	7.335	0.045	ZF	ZF6HP19
PX-23-9K	R445300K	B45300HTE	9.500	8.250	0.045	ZF	ZF4HP22 JEEP A999
PX-23-9X70K	R475300K	B66300HTE	9.500	8.250	0.070	ZF	ZF4HP22 JEEP A999
RX-23-1T	R445420T	B45420HTE	7.500	6.688	0.045	RENAULT	DPO & AL4, Early
RX-23-1X70T	R475420T	N/A	7.500	6.688	0.070	RENAULT	DPO & AL4, Early
RX-23-2KK	N/A	N/A	7.930	7.100	0.045	RENAULT	DPO, PEUGEOT (AL4), CITROEN, Late
RX-23-2X70KK	N/A	N/A	7.930	7.100	0.045	RENAULT	DPO, PEUGEOT (AL4), CITROEN, Late
SX-23-13K	R445320K	B45320HTE	9.000	7.750	0.045	GM	245mm LU, Models: 125C, 180C, 200C, 440-R4, 700-R4 (S-10 Only)

LOCKUP LININGS LISTED BY TRI PART

Suffix Code Reminder: T - Tan, C - Carbon, HC - High Carbon, K - KEVLAR®, J - LockJoint™

Tri Part #	Raybestos Part #	BW / Sonnax Part #	O.D. (")	I.D. (")	Th. (")	Make	Application
SX-23-13X70K	R475320K	B66320HTE	9.000	7.750	0.070	GM	245mm LU, Models: 125C, 180C, 200C, 440-R4, 700-R4 (S-10 Only)
SX-23-25K	R445240K	B45240HTE	11.580	10.313	0.045	GM	310mm 4L80-E, Early & Late
SX-23-25X70K	R475240K	B66240HTE	11.580	10.313	0.070	GM	310mm 4L80-E, Early & Late
SX-23-31K	R445130K	B45130HTE	8.875	8.000	0.045	GM	SATURN 228mm
SX-23-31X70K	R475130K	B66130HTE	8.875	8.000	0.070	GM	SATURN 228mm
SX-23-32K	R445270K	B45270HTE	10.375	9.375	0.045	GM	265mm LU, 4T60E & 4T80E
SX-23-32X70K	R475270K	B66270HTE	10.375	9.375	0.070	GM	265mm LU, 4T60E & 4T80E
SX-23-35K	N/A	N/A	12.625	10.688	0.045	CHRYSLER	310mm LU, 47RH, A618, Cummins Diesel
SX-23-35X70K	N/A	N/A	12.625	10.688	0.070	CHRYSLER	310mm LU, 47RH, A618, Cummins Diesel
SX-23-38K	N/A	N/A	13.000	10.375	0.045	CHRYSLER	310mm LU, 47RH, A618, Cummins Diesel
SX-23-38X70K	N/A	N/A	13.000	10.375	0.070	CHRYSLER	310mm LU, 47RH, A618, Cummins Diesel
SX-23-40K	N/A	N/A	12.344	9.906	0.045	GM	Miscellaneous
SX-23-40X70K	N/A	N/A	12.344	9.906	0.070	GM	Miscellaneous
SX-23-42K	N/A	N/A	8.000	6.375	0.045	GM	Miscellaneous
SX-23-42X70K	N/A	N/A	8.000	6.375	0.070	GM	Miscellaneous
SX-23-44K	R445350K	B45350HTE	12.344	10.250	0.045	ALLISON	1000/2000/2400 SERIES
SX-23-44X70K	R475350K	B66350HTE	12.344	10.250	0.070	ALLISON	1000/2000/2400 SERIES
SX-23-46K	N/A	N/A	13.500	11.508	0.045	ALLISON	B500 HD 4000 WORLD SERIES
SX-23-46X70K	N/A	N/A	13.500	11.508	0.045	ALLISON	B500 HD 4000 WORLD SERIES
SX-23-47HC	R445084HC	B45084HTS	11.625	10.375	0.045	GM	310mm 4L80-E, Early & Late

LOCKUP LININGS LISTED BY TRI PART

Suffix Code Reminder: T - Tan, C - Carbon, HC - High Carbon, K - KEVLAR®, J - LockJoint™

Tri Part #	Raybestos Part #	BW / Sonnax Part #	O.D. (")	I.D. (")	Th. (")	Make	Application
SX-23-47X70HC	R475084HC	B66084HTS	11.625	10.375	0.070	GM	310mm 4L80-E, Early & Late
SX-23-48K	R445220K	N/A	9.188	7.500	0.045	GM	HIGH PERFOR-MANCE 245mm LU
SX-23-48X70K	R475220K	N/A	9.188	7.500	0.070	GM	HIGH PERFOR-MANCE 245mm LU
SX-23-49K	N/A	B45230HTE	12.500	10.750	0.045	CHRYSLER	310mm LU, 47RH, A618, Cummins Diesel
SX-23-49X70K	N/A	B66230HTE	12.500	10.750	0.070	CHRYSLER	310mm LU, 47RH, A618, Cummins Diesel
SX-23-4K	R445250K	B45250HTE	11.125	10.000	0.045	GM / FORD / ZF	280mm LU (4L60-E), 298mm LU "VJCX", 300mm (4L60-E) / 4R100, 5R110W 6-Stud / ZF4HP24
SX-23-4X70K	R475250K	B66250HTE	11.125	10.000	0.070	GM / FORD / ZF	280mm LU (4L60-E), 298mm LU "VJCX", 300mm (4L60-E) / 4R100, 5R110W 6-Stud / ZF4HP24
SX-23-50K	N/A	N/A	8.750	7.562	0.045	GM	SATURN
SX-23-50X70K	N/A	N/A	8.750	7.562	0.070	GM	SATURN
SX-23-51T	R445640T	B45640HTE	8.062	7.250	0.045	GM / TOYOTA / AISIN AW	CHEVY '04 / U440E / AW 80/81-40LE
SX-23-51X70K	N/A	N/A	8.062	7.250	0.070	GM / TOYOTA / AISIN AW	CHEVY '04 / U440E / AW 80/81-40LE
SX-23-52K	R445810K	B45965HTE	10.313	9.250	0.045	GM / HONDA	SATURN / MDKA, MDRA(MDX)
SX-23-52X70K	R475810K	B66965HTE	10.313	9.250	0.070	GM / HONDA	SATURN / MDKA, MDRA(MDX)
SX-23-54K	N/A	N/A	12.340	10.750	0.045	ALLISON	1000/2000/2400 SERIES
SX-23-54X70K	N/A	N/A	12.340	10.750	0.070	ALLISON	1000/2000/2400 SERIES
SX-23-55HC	R445670HC	B45670HTS	10.100	7.500	0.045	GM	HIGH PERFOR-MANCE CORVETTE
SX-23-55X70HC	N/A	N/A	10.100	7.500	0.070	GM	HIGH PERFOR-MANCE CORVETTE

LOCKUP LININGS LISTED BY TRI PART

Suffix Code Reminder: T - Tan, C - Carbon, HC - High Carbon, K - KEVLAR®, J - LockJoint™

Tri Part #	Raybestos Part #	BW / Sonnax Part #	O.D. (")	I.D. (")	Th. (")	Make	Application
SX-23-56K	R445601K	B45002HTE	13.625	11.500	0.045	ALLISON	HD 4000 Series
SX-23-56X70HC	R475601HC	B66002HTS	13.625	11.500	0.070	ALLISON	HD 4000 Series
SX-23-57HC	R445611HC	B45001HTS	11.570	10.000	0.045	ALLISON	MD 3000 Series
SX-23-57X70HC	N/A	B66001HTS	11.570	10.000	0.045	ALLISON	MD 3000 Series
SX-23-58K	N/A	N/A	8.500	7.500	0.045	GM	B-21
SX-23-58X70K	N/A	N/A	8.500	7.500	0.070	GM	B-21
SX-23-61K	N/A	B45680HTE	9.813	8.562	0.045	GM	6T40/6T45, 236mm
SX-23-61X70K	N/A	B66680HTE	9.813	8.562	0.070	GM	6T40/6T45, 236mm
SX-23-61HC	R445680HC	B45680HTS	9.813	8.562	0.045	GM	6T40/6T45, 236mm
SX-23-61X70HC	N/A	B66680HTS	9.813	8.562	0.070	GM	6T40/6T45, 236mm
SX-23-62HC	N/A	N/A	8.150	6.772	0.045	GM	6L45
SX-23-62X70HC	N/A	N/A	8.150	6.772	0.070	GM	6L45
SX-23-63K	N/A	N/A	8.430	6.665	0.045	GM	MISCELLANEOUS
SX-23-63X70K	N/A	N/A	8.430	6.665	0.070	GM	MISCELLANEOUS
SX-23-65K	N/A	B45580HTE	11.233	10.135	0.045	ALLISON	LCT 1000 (Captive Clutch)
SX-23-65X70K	N/A	N/A	11.233	10.135	0.070	ALLISON	LCT 1000 (Captive Clutch)
SX-23-66K	R445015K	B45510HTE	11.750	10.250	0.045	GM	4L80E
SX-23-66X70K	R475015K	B46610HTE	11.750	10.250	0.070	GM	4L80E
SX-23-69T	R445240T	B45240HTE	11.500	10.250	0.045	GM	4L80E DUAL STATOR, SINGLE STATOR
SX-23-69X70T	R475240T	B66240HTE	11.500	10.250	0.070	GM	4L80E DUAL STATOR, SINGLE STATOR
SX-23-71MK	N/A	N/A	9.842	8.675	0.045		GM 8L90
SX-23-LS45K	N/A	N/A	2.875	2.375	0.045	GM	298mm LU 250C, 350C,700-R4,4L60E

LOCKUP LININGS LISTED BY TRI PART

Suffix Code Reminder: T - Tan, C - Carbon, HC - High Carbon, K - KEVLAR®, J - LockJoint™

Tri Part #	Raybestos Part #	BW / Sonnax Part #	O.D. (")	I.D. (")	Th. (")	Make	Application
SX-23-LS45X70T	R475561T	N/A	2.875	2.375	0.070	GM	298mm LU 250C, 350C,700-R4,4L60E
SX-23-SS45K	N/A	N/A	2.188	1.563	0.045	GM	245mm LU, Models: 125C, 180C, 200C, 440-R4, 700-R4 (S-10 Only)
SX-23-SS45X70T	R475562T	N/A	2.188	1.563	0.070	GM	245mm LU, Models: 125C, 180C, 200C, 440-R4, 700-R4 (S-10 Only)
TX-22X70K	R475190K	B66190HTE	10.563	9.250	0.070	CHRYSLER	10-3/4" LU, Early & Late
TX-22XK	R445190K	B45190HTE	10.563	9.250	0.045	CHRYSLER	10-3/4" LU, Early & Late
TX-23-11K	N/A	B45280HTE	10.313	8.750	0.045	CHRYSLER	10" (254mm) LU, A-606, FWD
TX-23-11X70K	N/A	B66280HTE	10.313	8.750	0.070	CHRYSLER	10" (254mm) LU, A-606, FWD
TX-23-12K	N/A	N/A	9.375	7.750	0.045	CHRYSLER	Miscellaneous
TX-23-12X70K	N/A	N/A	9.375	7.750	0.070	CHRYSLER	Miscellaneous
TX-23-13K	N/A	N/A	10.125	8.125	0.045	CHRYSLER	Miscellaneous
TX-23-13X70K	N/A	N/A	10.125	8.125	0.070	CHRYSLER	Miscellaneous
TX-23-14K	N/A	N/A	10.750	9.000	0.045	CHRYSLER	10-3/4" LU, Early & Late
TX-23-14X70K	N/A	N/A	10.750	9.000	0.070	CHRYSLER	10-3/4" LU, Early & Late
TX-23-15K	R445220K	B45220HTE	9.125	7.750	0.045	CHRYSLER	9-1/2" LU, A-470, A-670, A-604, FWD
TX-23-15X70K	R475220K	B66220HTE	9.125	7.750	0.070	CHRYSLER	9-1/2" LU, A-470, A-670, A-604, FWD
TX-23-16K	R445220K	B45220HTE	9.125	7.813	0.045	CHRYSLER	10" (254mm) LU, A-606, FWD
TX-23-16X70K	R475220K	B66220HTE	9.125	7.813	0.070	CHRYSLER	10" (254mm) LU, A-606, FWD
TX-23-17K	R445200K	B45200HTE	10.000	8.750	0.045	CHRYSLER / HONDA	10” 41TE & 42LE, 62TE / B7TA, B7VA, B7YA
TX-23-17MK	N/A	B45200HTE	10.000	8.750	0.045	CHRYSLER	10” 41TE & 42LE
TX-23-17X70K	R475200K	B66200HTE	10.000	8.750	0.070	CHRYSLER / HONDA	10” 41TE & 42LE, 62TE / B7TA, B7VA, B7YA
TX-23-17X70MK	R465000	N/A	10.000	8.750	0.070	CHRYSLER	10” 41TE & 42LE

LOCKUP LININGS LISTED BY TRI PART

Suffix Code Reminder: T - Tan, C - Carbon, HC - High Carbon, K - KEVLAR®, J - LockJoint™

Tri Part #	Raybestos Part #	BW / Sonnax Part #	O.D. (")	I.D. (")	Th. (")	Make	Application
TX-23-18K	R445210K	B45210HTE	9.625	7.625	0.045	CHRYSLER	9-1/2" LU, A-470, A-670, A-604, FWD
TX-23-18X70K	R475210K	B66210HTE	9.625	7.625	0.070	CHRYSLER	9-1/2" LU, A-470, A-670, A-604, FWD
TX-23-19HC	R445004HC	N/A	10.500	9.188	0.045	CHRYSLER	45RFE A518
TX-23-19MK	N/A	N/A	10.500	9.188	0.045	CHRYSLER	45RFE A518
TX-23-19X70HC	R475004HC	B66500HTS	10.500	9.188	0.070	CHRYSLER	45RFE A518
TX-23-19X70MK	R470000	N/A	10.500	9.188	0.070	CHRYSLER	45RFE A518
TX-23-20HC	R445094HC	N/A	4.938	4.438	0.045	CHRYSLER	Miscellaneous
TX-23-20X70HC	R475094HC	N/A	4.938	4.438	0.070	CHRYSLER	Miscellaneous
TX-23-21K	R445110K	B45110HTE	9.313	8.250	0.045	MITSUBISHI / SUBARU / JATCO	F4A42 '98 Galant / RE4R01A (Subaru) / RL3F01A FWD DA-6, RL4F02A, DA-13
TX-23-21X70K	R475110K	B66110HTE	9.313	8.250	0.070	MITSUBISHI / SUBARU / JATCO	F4A42 '98 Galant / RE4R01A (Subaru) / RL3F01A FWD DA-6, RL4F02A, DA-13
TX-23-24K	N/A	N/A	9.625	7.875	0.045	CHRYSLER	Miscellaneous
TX-23-24X70K	N/A	N/A	9.625	7.875	0.070	CHRYSLER	Miscellaneous
TX-23-25K	R445205K	B45205HTE	9.921	7.921	0.045	CHRYSLER	Miscellaneous
TX-23-25X70K	R475205K	B66205HTE	9.921	7.921	0.070	CHRYSLER	Miscellaneous
TX-23-26HC	N/A	N/A	11.654	10.157	0.045	CHRYSLER	68RFE 6.7L Cummins Diesel
TX-23-26X70HC	N/A	N/A	11.654	10.157	0.070	CHRYSLER	68RFE 6.7L Cummins Diesel
TX-23-32K	R445180K	B45180HTE	10.750	9.125	0.045	CHRYSLER	10-3/4" LU, Early & Late
TX-23-32X70K	R475180K	B66180HTE	10.750	9.125	0.070	CHRYSLER	10-3/4" LU, Early & Late
TX-23-33HC	N/A	N/A	12.562	11.625	0.045	CHRYSLER	DODGE
TX-23-33X70HC	N/A	N/A	12.562	11.625	0.070	CHRYSLER	DODGE
TX-23-35K	R445450K	B45450HTE	9.930	8.800	0.045	HONDA	B7TA / VA / YA

LOCKUP LININGS LISTED BY TRI PART

Suffix Code Reminder: T - Tan, C - Carbon, HC - High Carbon, K - KEVLAR®, J - LockJoint™

Tri Part #	Raybestos Part #	BW / Sonnax Part #	O.D. (")	I.D. (")	Th. (")	Make	Application
TX-23-35MK	N/A	N/A	9.930	8.800	0.045		CHRYSLER
TX-23-4K	R445820K	N/A	10.750	9.250	0.045	CHRYSLER	10-3/4" LU, Early & Late
TX-23-4X70K	R475820K	N/A	10.750	9.250	0.070	CHRYSLER	10-3/4" LU, Early & Late
TX-23-5K	N/A	N/A	9.125	7.625	0.045	CHRYSLER	9-1/2" LU, A-470, A-670, A-604, FWD
TX-23-5X70K	N/A	N/A	9.125	7.625	0.070	CHRYSLER	9-1/2" LU, A-470, A-670, A-604, FWD
TX-23-6K	R445390K	B45390HTE	9.000	8.000	0.045	MITSUBISHI	KM-176 LU, CT-11
TX-23-6X70K	R475390K	B66390HTE	9.000	8.000	0.070	MITSUBISHI	KM-176 LU, CT-11
TX-23-9K	N/A	N/A	9.625	8.000	0.045	CHRYSLER	9-1/2" LU, FWD
TX-23-9X70K	N/A	N/A	9.625	8.000	0.070	CHRYSLER	9-1/2" LU, FWD
TX-23X70K	R475500K	B66500HTE	10.500	9.125	0.070	CHRYSLER	10-3/4" LU, Early & Late
TX-23XK	R445500K	B45500HTE	10.500	9.125	0.045	CHRYSLER	10-3/4" LU, Early & Late
YX-23-10K	N/A	N/A	10.063	8.500	0.045	TOYOTA	TO-51
YX-23-10X70K	N/A	N/A	10.063	8.500	0.070	TOYOTA	TO-51
YX-23-11K	N/A	N/A	10.126	8.626	0.045	TOYOTA	A-440F, TO-34
YX-23-11X70K	N/A	N/A	10.126	8.626	0.045	TOYOTA	A-440F, TO-34
YX-23-12K	R445520K	B45520HTE	9.375	7.875	0.045	TOYOTA, AISIN AW, HYUNDAI KIA	LEXUS A540E, A960E/F (TB-65SN) U250E /TF-60SN (VW 09G) / A4CF1, A4CF2 A540E
YX-23-12X70K	R475520K	B66520HTE	9.375	7.875	0.070	TOYOTA, AISIN AW, HYUNDAI KIA	LEXUS A540E, A960E/F (TB-65SN) U250E /TF-60SN (VW 09G) / A4CF1, A4CF2 A540E
YX-23-17K	N/A	B45440HTE	11.000	9.563	0.045	AISIN AW	450-43LE
YX-23-17X70K	N/A	N/A	11.000	9.563	0.070	AISIN AW	450-43LE
YX-23-18K	N/A	N/A	10.000	8.500	0.045	TOYOTA	TO-64

LOCKUP LININGS LISTED BY TRI PART

Suffix Code Reminder: T - Tan, C - Carbon, HC - High Carbon, K - KEVLAR®, J - LockJoint™

Tri Part #	Raybestos Part #	BW / Sonnax Part #	O.D. (")	I.D. (")	Th. (")	Make	Application
YX-23-18X70K	N/A	N/A	10.000	8.500	0.070	TOYOTA	TO-64
YX-23-19K	R475360K	B66360HTE	8.500	7.250	0.045	JATCO	L3N71B, DA-5
YX-23-19X70K	R445360K	B66360HTE	8.500	7.252	0.070	JATCO	L3N71B, DA-5
YX-23-1K	R445040K	B45040HTE	10.000	8.250	0.045	FORD	A4LD, 4R55E
YX-23-1X70K	R475040K	B66040HTE	10.000	8.250	0.070	FORD	A4LD, 4R55E
YX-23-20K	N/A	N/A	10.125	8.688	0.045	AISIN AW	55-50SN
YX-23-20X70K	N/A	N/A	10.125	8.688	0.070	AISIN AW	55-50SN
YX-23-21K	R445260K	B45260HTE	10.500	9.000	0.045	AISIN AW & VW / TOYOTA	TR-60SN (VW 09D) / LEXUS A442F, A440L U140E / A750E
YX-23-21X70K	R475260K	B66260HTE	10.500	9.000	0.070	AISIN AW & VW / TOYOTA	TR-60SN (VW 09D) / LEXUS A442F, A440L U140E / A750E
YX-23-22K	R445280K	B45280HTE	10.250	8.625	0.045	CHRYSLER / AISIAN AW / TOYOTA	10" LU / 55-50SN / A440F
YX-23-22X70K	R475280K	B66280HTE	10.250	8.625	0.070	CHRYSLER / AISIAN AW / TOYOTA	10" LU / 55-50SN / A440F
YX-23-24K	R445860K	B45940HTE	10.188	8.730	0.045	TOYOTA	LEXUS U660E
YX-23-24X70K	R475860K	B66940HTE	10.188	8.730	0.070	TOYOTA	LEXUS U660E
YX-23-25K	N/A	B45970HTE	8.900	7.635	0.045	TOYOTA	LEXUS, A6GF1, U760E (TM-60LS)
YX-23-25X70K	N/A	B66970HTE	8.900	7.635	0.070	TOYOTA	LEXUS, A6GF1, U760E (TM-60LS)
YX-23-2K	R445160K	N/A	8.250	7.250	0.045	TOYOTA	A-131 LU
YX-23-2X70K	R475160K	N/A	8.250	7.250	0.070	TOYOTA	A-131 LU
YX-23-23KK			7.430	6.300	0.045	AISIN,SEIKI, TOYOTA	A465, AS68RC, A860E
YX-23-3K	R445071K	B45070HTE	9.750	8.250	0.045	FORD / TOYOTA / CHRYSLER	4R55E, 5R55E Late, A4LD / A140 / 10" LU

LOCKUP LININGS LISTED BY TRI PART

Suffix Code Reminder: T - Tan, C - Carbon, HC - High Carbon, K - KEVLAR®, J - LockJoint™

Tri Part #	Raybestos Part #	BW / Sonnax Part #	O.D. (")	I.D. (")	Th. (")	Make	Application
YX-23-3X70K	R475071K	B66070HTE	9.750	8.250	0.070	FORD / TOYOTA / CHRYSLER	4R55E, 5R55E Late, A4LD / A140 / 10" LU
YX-23-7K	N/A	N/A	10.375	8.625	0.045	TOYOTA	A-440-L, TO-46, 87 Landcruiser
YX-23-7X70K	N/A	N/A	10.375	8.625	0.070	TOYOTA	A-440-L, TO-46, 87 Landcruiser
YX-23-70MK			9.845	8.675	0.045	GM	8L90
YX-23-8K	R445530K	N/A	10.125	8.25	0.045	TOYOTA	A-340H
YX-23-8X70K	R475530K	N/A	10.125	8.250	0.070	TOYOTA	A-340H

LOCKUP LININGS LISTED BY SONNAX PART

Suffix Code Reminder: T - Tan, C - Carbon, HC - High Carbon, K - KEVLAR®, J - LockJoint™

BW / Sonnax Part #	TRI Part #	Raybestos Part #	O. D. (")	I. D. (")	Th. (")	Make	Application
B66965HTE	NX-23-11X70K	N/A	10.375	9.250	0.070	HONDA	MDKA, MDRA (MDX)
B45001HTS	SX-23-57HC	R445611HC	11.570	10.000	0.045	ALLISON	MD 3000 Series
B45002HTE	SX-23-56K	R445601K	13.625	11.500	0.045	ALLISON	HD 4000 Series
B45010HTE	FX-23-10K	R445010K	11.500	10.000	0.045	FORD	E4OD
B45020HTE	JX-23-23K	R445020K	10.750	9.500	0.045	JATCO	RE4R03A, DA-30 280mm
B45030HTE	FX-23-13K	R445030K	10.500	8.625	0.045	BORG WARNER	BTR LE85
B45040HTE	YX-23-1K	R445040K	10.000	8.250	0.045	FORD	A4LD, 4R55E
B45050HTE	JX-23-22K	R445050K	9.875	8.750	0.045	JATCO / MITSUBISHI	RE4R01A, DA-18, DA-48 / KM-175, KM-176
B45050HTE	JX-23-32K	R445050K	9.813	8.813	0.045	GM / JATCO / ZF	8L90 / RE4F04A/V, DA-37, DA-39, JF010E (RE0F09A), JF506E (with sensor ring), RE4R01A / ZF4HP16, ZF5HP19 (Single Friction)
B45060HTE	JX-23-33K	R445060K	9.750	9.000	0.045	JATCO	RL4F02A, DA-13, DA-11
B45064HTE	JX-23-10K	R445370K	9.938	9.000	0.045	ZF/ CHRYSLER/ JATCO	ZF4HP22 / JEEP A999 / RL4F02A DA-11
B45070HTE	FX-23-57K	R445070K	9.725	8.250	0.045	FORD / TOYOTA / CHRYSLER	4R55E, 5R55E Late, A4LD / A140 / 10" LU
B45070HTE	NX-23-8K	R445071K	9.750	8.313	0.045	HYUNDAI / FORD / CHRYSLER / TOYOTA	SONATA / 4R55E, 5R55E Late, A4LD / 10" LU / A140
B45070HTE	YX-23-3K	R445071K	9.750	8.250	0.045	FORD / TOYOTA / CHRYSLER	4R55E, 5R55E Late, A4LD / A140 / 10" LU
B45070HTS	PX-23-19HC	R445070HC	9.710	8.190	0.045	FORD / TOYOTA / ZF	4R55E, 5R55E Late, A4LD / A140 / ZF6HP26 260mm
B45080HTE	FX-23-89K	R445080K	9.750	8.125	0.045		AXOD/E, CD4E, 9-1/4 & 10-1/4
B45084HTS	SX-23-47HC	R445084HC	11.625	10.375	0.045	GM	310mm 4L80-E, Early & Late
B45090HTE	NX-23-2K	R445090K	9.500	8.500	0.045	HONDA / VW / FORD / MAZDA	MISCEL., 96 LU (01M) / 4F27E (Focus) / FN4A-EL, G4A-EL & 4EAT-G, L/S, G4A-EL, Late
B45100HTE	FX-23-18K	R445100K	9.375	8.125	0.045	FORD	A4LD MULTI-CLUTCH 4.0
B45110HTE	JX-23-20K	R445110K	9.240	8.313	0.045	SUBARU / JATCO	RE4R01A / RL3F01A FWD, DA-6, RL4F02A DA-13

LOCKUP LININGS LISTED BY SONNAX PART

Suffix Code Reminder: T - Tan, C - Carbon, HC - High Carbon, K - KEVLAR®, J - LockJoint™

BW / Sonnax Part #	TRI Part #	Raybestos Part #	O. D. (")	I. D. (")	Th. (")	Make	Application
B45110HTE	TX-23-21K	R445110K	9.313	8.250	0.045	MITSUBISHI / SUBARU / JATCO	F4A42 '98 Galant / RE4R01A (Subaru) / RL3F01A FWD DA-6, RL4F02A, DA-13
B45120HTE	FX-23-6K	R445120K	9.250	8.125	0.045	FORD	AXOD / AXODE
B45130HTE	SX-23-31K	R445130K	8.875	8.000	0.045	GM	SATURN 228mm
B45150HTE	NX-23-1K	R445150K	8.750	7.750	0.045	HONDA / ZF	AS, F4 / ZF4HP22 BMW (BABY, 318), 254mm, BM-12
B45160HTE	JX-23-37K	R445160K	8.250	7.125	0.045	JATCO	L3N71B
B45170HTE	FX-23-17K	R445170K	6.813	6.438	0.045	FORD	A4LD MULTI-CLUTCH 4.0
B45180HTE	TX-23-32K	R445180K	10.750	9.125	0.045	CHRYSLER	10-3/4" LU, Early & Late
B45190HTE	FX-23-26K	R445190K	10.563	9.313	0.045	FORD	AOD-E, 4R70W
B45190HTE	FX-23-59K	N/A	10.500	9.375	0.045	CHRYSLER / FORD / JATCO	10-3/4" LU / AODE, 4R70W, 4R75W / RE4R03A, 250mm
B45190HTE	TX-22XK	R445190K	10.563	9.250	0.045	CHRYSLER	10-3/4" LU, Early & Late
B45200HTE	TX-23-17K	R445200K	10.000	8.750	0.045	CHRYSLER / HONDA	10" 41TE & 42LE, 62TE / B7TA, B7VA, B7YA
B45200HTE	TX-23-17MK	N/A	10.000	8.750	0.045	CHRYSLER	10" 41TE & 42LE
B45205HTE	TX-23-25K	R445205K	9.921	7.921	0.045	CHRYSLER	Miscellaneous
B45210HTE	TX-23-18K	R445210K	9.625	7.625	0.045	CHRYSLER	9-1/2" LU, A-470, A-670, A-604, FWD
B45220HTE	TX-23-15K	R445220K	9.125	7.750	0.045	CHRYSLER	9-1/2" LU, A-470, A-670, A-604, FWD
B45220HTE	TX-23-16K	R445220K	9.125	7.813	0.045	CHRYSLER	10" (254mm) LU, A-606, FWD
B45230HTE	SX-23-49K	N/A	12.500	10.750	0.045	CHRYSLER	310mm LU, 47RH, A618, Cummins Diesel
B45240HTE	SX-23-25K	R445240K	11.580	10.313	0.045	GM	310mm 4L80-E, Early & Late
B45240HTE	SX-23-69T	R445240T	11.500	10.250	0.045		GM 4L80E DUAL STATOR, SINGLE STATOR
B45250HTE	SX-23-4K	R445250K	11.125	10.000	0.045	GM / FORD / ZF	280mm LU (4L60-E), 298mm LU"VJCX", 300mm (4L60-E) / 4R100, 5R110W 6-Stud / ZF4HP24
B45260HTE	YX-23-21K	R445260K	10.500	9.000	0.045	AISIN AW & VW / TOYOTA	TR-60SN (VW 09D) / LEXUS A442F, A440L U140E / A750E

LOCKUP LININGS LISTED BY SONNAX PART

Suffix Code Reminder: T - Tan, C - Carbon, HC - High Carbon, K - KEVLAR®, J - LockJoint™

BW / Sonnax Part #	TRI Part #	Raybestos Part #	O. D. (")	I. D. (")	Th. (")	Make	Application
B45270HTE	SX-23-32K	R445270K	10.375	9.375	0.045	GM	265mm LU, 4T60E & 4T80E
B45280HTE	TX-23-11K	N/A	10.313	8.750	0.045	CHRYSLER	10" (254mm) LU, A-606, FWD
B45280HTE	YX-23-22K	R445280K	10.250	8.625	0.045	CHRYSLER / AISIAN AW / TOYOTA	10" LU / 55-50SN / A440F
B45290HTE	FX-23-63K	R445290K	9.625	8.375	0.045	FORD / MITSUBISHI	A4LD, 4R55E, 6F35 / F4/ R4A51, F5/R5A51
B45290HTE	NX-23-10K	R445290K	9.625	8.438	0.045	HONDA	Miscellaneous
B45300HTE	PX-23-9K	R445300K	9.500	8.250	0.045	ZF	ZF4HP22 JEEP A999
B45310HTE	JX-23-3K	R445310K	9.000	8.250	0.045	GM / JATCO	245mm LU/L4N71B RWD,DA-8
B45320HTE	SX-23-13K	R445320K	9.000	7.750	0.045	GM	245mm LU, Models: 125C, 180C, 200C, 440-R4, 700-R4 (S-10 Only)
B45330HTE	PX-23-10K	R445330K	10.150	9.360	0.045	ZF	ZF5HP30
B45350HTE	SX-23-44K	R445350K	12.344	10.250	0.045	ALLISON	1000/2000/2400 SERIES
B45370HTE	NX-23-7K	R445370K	10.000	9.000	0.045	HONDA / MAZDA / FORD	HO-14 /MPYA / FNR5(FS5A-EL)
B45380HTE	FX-23-19T	R445380T	9.688	8.250	0.045	FORD	A4LD, 4R55E
B45390HTE	TX-23-6K	R445390K	9.000	8.000	0.045	MITSUBISHI	KM-176 LU, CT-11
B45410HTE	FX-23-86K	R445410K	11.250	9.700	0.045	FORD	4R100, 5R110W Early
B45420HTE	RX-23-1T	R445420T	7.500	6.688	0.045	RENAULT	DPO & AL4, Early
B45440HTE	YX-23-17K	N/A	11.000	9.563	0.045	AISIN AW	450-43LE
B45450HTE	NX-23-9K	R445450K	9.875	8.875	0.045	HONDA	B7TA, B7VA, B7YA
B45450HTE	TX-23-35K	R445450K	9.930	8.800	0.045		HONDA B7TA / VA / YA
B45500HTE	TX-23XK	R445500K	10.500	9.125	0.045	CHRYSLER	10-3/4" LU, Early & Late
B45510HTE	SX-23-66K	R445015K	11.750	10.250	0.045	GM	4L80E
B45520HTE	JX-23-8K	R445520K	9.250	7.875	0.045	CHRYSLER / MAZDA / FORD / TOYOTA	9-1/2" LU, A-470, A-670, A-604, FWD /G4A /FORD 4EAT / A540E

LOCKUP LININGS LISTED BY SONNAX PART

Suffix Code Reminder: T - Tan, C - Carbon, HC - High Carbon, K - KEVLAR®, J - LockJoint™

BW / Sonnax Part #	TRI Part #	Raybestos Part #	O. D. (")	I. D. (")	Th. (")	Make	Application
B45520HTE	YX-23-12K	R445520K	9.375	7.875	0.045	TOYOTA, AISIN AW, HYUNDAI KIA	LEXUS A540E, A960E/F (TB-65SN) U250E /TF-60SN (VW 09G) / A4CF1, A4CF2 A540E
B45540HTE	FX-23-24T	R445460T	9.125	8.063	0.045	FORD	CD4E
B45540HTE	NX-23-6K	R445540K	9.125	8.125	0.045	HONDA	LU
B45551HTE	FX-23-28K	R445551K	11.250	10.000	0.045	FORD	AOD-E, 4R70W
B45580HTE	SX-23-65K	N/A	11.233	10.135	0.045	ALLISON	LCT 1000 (Captive Clutch)
B45606HTS	FX-23-74HC	N/A	8.080	6.930	0.045	FORD	6R60, 6R75W
B45606HTS	FX-23-74SHC	N/A	8.080	6.930	0.045	FORD	6R60, 6R75W
B45640HTE	SX-23-51T	R445640T	8.062	7.250	0.045	GM / TOYOTA / AISIN AW	CHEVY '04 / U440E / AW 80 / 81-40LE
B45650HTS	FX-23-85HC	N/A	8.854	7.591	0.045		
B45670HTS	SX-23-55HC	R445670HC	10.100	7.500	0.045	GM	HIGH PERFORMANCE CORVETTE
B45680HTE	SX-23-61K	N/A	9.813	8.562	0.045		
B45680HTS	SX-23-61HC	R445680HC	9.813	8.562	0.045	GM	6T40/6T45, 236mm
B45690HTS	PX-23-11HC	R445024HC	9.360	8.380	0.045	FORD / ZF	FOCUS FN / ZF5HP24
B45740HTS	PX-23-20HC	N/A	9.150	7.875	0.045	ZF	ZF6HP19, 245mm
B45750HTS	FX-23-52HC	R445440HC	11.125	9.813	0.045	FORD	4R100, 5R110W, Early
B45930HTE	NX-23-12K	R445810K	10.250	9.250	0.045	HONDA / FORD / GM	40-25 / 6F50/6F55 / 6T70/6T75
B45930HTE	NX-23-5K	N/A	10.125	9.125	0.045	FORD / GM / HONDA	6F50, 6F55 / 6T70, 6T75 / G4
B45935HTE	FX-23-82SK	N/A	9.500	8.250	0.045	FORD	6R80, 280mm (Early)
B45940HTE	YX-23-24K	R445860K	10.188	8.730	0.045	TOYOTA	LEXUS U660E
B45950HTE	FX-23-83SK	N/A	9.880	8.750	0.045	FORD	6R80, 260mm (Late)
B45955HTE	FX-23-80SK	N/A	10.400	9.200	0.045	FORD	6R80, 280mm (Late)
B45960HTE	FX-23-65K	N/A	10.125	9.000	0.045	FORD / GM / HONDA	HD3696-8-2 / 6L90 (Captive Clutch) / MPYA

LOCKUP LININGS LISTED BY SONNAX PART

Suffix Code Reminder: T - Tan, C - Carbon, HC - High Carbon, K - KEVLAR®, J - LockJoint™

BW / Sonnax Part #	TRI Part #	Raybestos Part #	O. D. (")	I. D. (")	Th. (")	Make	Application
B45965HTE	NX-23-11K	N/A	10.375	9.250	0.045	HONDA	MDKA, MDRA (MDX)
B45965HTE	SX-23-52K	R445810K	10.313	9.250	0.045	GM / HONDA	SATURN / MDKA, MDRA (MDX)
B45970HTE	YX-23-25K	N/A	8.900	7.635	0.045	TOYOTA	LEXUS, A6GF1, U760E (TM-60LS)
B46610HTE	SX-23-66X70K	R475015K	11.750	10.250	0.070	GM	4L80E
B66001HTS	SX-23-57X70HC	N/A	11.570	10.000	0.045	ALLISON	MD 3000 Series
B66002HTS	SX-23-56X70HC	R475601HC	13.625	11.500	0.070	ALLISON	HD 4000 Series
B66010HTE	FX-23-10X70K	R475010K	11.500	10.000	0.070	FORD	E4OD
B66020HTE	JX-23-23X70K	R475020K	10.750	9.500	0.070	JATCO	RE4R03A, DA-30 280mm
B66040HTE	YX-23-1X70K	R475040K	10.000	8.250	0.070	FORD	A4LD, 4R55E
B66050HTE	JX-23-22X70K	R475050K	9.875	8.750	0.070	JATCO / MITSUBISHI	RE4R01A, DA-18, DA-48 / KM-175, KM-176
B66050HTE	JX-23-32X70K	R475050K	9.813	8.813	0.070	GM / JATCO / ZF	8L90 / RE4F04A/V, DA-37, DA-39, JF010E (RE0F09A), JF506E (with sensor ring), RE4R01A / ZF4HP16, ZF5HP19 (Single Friction)
B66060HTE	JX-23-33X70K	R475060K	9.750	9.000	0.070	JATCO	RL4F02A, DA-13, DA-11
B66064HTE	JX-23-10X70K	R475370K	9.938	9.000	0.070	ZF/ CHRYSLER/ JATCO	ZF4HP22 / JEEP A999 / RL4F02A DA-11
B66070HTE	FX-23-57X70K	R475070K	9.725	8.250	0.070	FORD / TOYOTA / CHRYSLER	4R55E, 5R55E Late, A4LD / A140 / 10" LU
B66070HTE	NX-23-8X70K	R475071K	9.750	8.313	0.070	HYUNDAI / FORD / CHRYSLER / TOYOTA	SONATA / 4R55E, 5R55E Late, A4LD / 10" LU / A140
B66070HTE	YX-23-3X70K	R475071K	9.750	8.250	0.070	FORD / TOYOTA / CHRYSLER	4R55E, 5R55E Late, A4LD / A140 / 10" LU
B66070HTS	PX-23-19X70HC	R475070HC	9.710	8.190	0.070	FORD / TOYO-TA / ZF	4R55E, 5R55E Late, A4LD / A140 / ZF6HP26 260mm
B66084HTS	SX-23-47X70HC	R475084HC	11.625	10.375	0.070	GM	310mm 4L80-E, Early & Late

LOCKUP LININGS LISTED BY SONNAX PART

Suffix Code Reminder: T - Tan, C - Carbon, HC - High Carbon, K - KEVLAR®, J - LockJoint™

BW / Sonnax Part #	TRI Part #	Raybestos Part #	O. D. (")	I. D. (")	Th. (")	Make	Application
B66090HTE	NX-23-2X70K	R475090K	9.500	8.500	0.070	HONDA / VW / FORD / MAZDA	MISCEL., 96 LU (01M) / 4F27E (Focus) / FN4A-EL, G4A-EL & 4EAT-G, L/S, G4A-EL, Late
B66110HTE	JX-23-20X70T	R475110T	9.240	8.313	0.070	SUBARU / JATCO	RE4R01A / RL3F01A FWD, DA-6, RL4F02A DA-13
B66110HTE	TX-23-21X70K	R475110K	9.313	8.250	0.070	MITSUBISHI / SUBARU / JATCO	F4A42 '98 Galant / RE4R01A (Subaru) / RL3F01A FWD DA-6, RL4F02A, DA-13
B66120HTE	FX-23-6X70K	R475120K	9.250	8.125	0.070	FORD	AXOD / AXODE
B66130HTE	SX-23-31X70K	R475130K	8.875	8.000	0.070	GM	SATURN 228mm
B66150HTE	NX-23-1X70K	R475150K	8.750	7.750	0.070	HONDA / ZF	AS, F4 / ZF4HP22 BMW (BABY, 318), 254mm, BM-12
B66160HTE	JX-23-37X70K	R475160K	8.250	7.125	0.070	JATCO	L3N71B
B66170HTE	FX-23-17X70K	R475170K	6.813	6.438	0.070	FORD	A4LD MULTI-CLUTCH 4.0
B66180HTE	TX-23-32X70K	R475180K	10.750	9.125	0.070	CHRYSLER	10-3/4" LU, Early & Late
B66190HTE	FX-23-26X70K	R445190K	10.563	9.313	0.070	FORD	AOD-E, 4R70W
B66190HTE	FX-23-59X70K	N/A	10.500	9.375	0.070	CHRYSLER / FORD / JATCO	10-3/4" LU / AODE, 4R70W, 4R75W / RE4R03A, 250mm
B66190HTE	TX-22X70K	R475190K	10.563	9.250	0.070	CHRYSLER	10-3/4" LU, Early & Late
B66200HTE	TX-23-17X70K	R475200K	10.000	8.750	0.070	CHRYSLER / HONDA	10" 41TE & 42LE, 62TE / B7TA, B7VA, B7YA
B66205HTE	TX-23-25X70K	R475205K	9.921	7.921	0.070	CHRYSLER	Miscellaneous
B66210HTE	TX-23-18X70K	R475210K	9.625	7.625	0.070	CHRYSLER	9-1/2" LU, A-470, A-670, A-604, FWD
B66220HTE	TX-23-15X70K	R475220K	9.125	7.750	0.070	CHRYSLER	9-1/2" LU, A-470, A-670, A-604, FWD
B66220HTE	TX-23-16X70K	R475220K	9.125	7.813	0.070	CHRYSLER	10" (254mm) LU, A-606, FWD
B66230HTE	SX-23-49X70K	N/A	12.500	10.750	0.070	CHRYSLER	310mm LU, 47RH, A618, Cummins Diesel
B66240HTE	SX-23-69X70T	R475240T	11.500	10.250	0.070	FORD	F-60 AODE, GM 4L80E DUAL STATOR, SINGLE STATOR
B66240HTE	SX-23-25X70K	R475240K	11.580	10.313	0.070	GM	310mm 4L80-E, Early & Late

LOCKUP LININGS LISTED BY SONNAX PART

Suffix Code Reminder: T - Tan, C - Carbon, HC - High Carbon, K - KEVLAR®, J - LockJoint™

BW / Sonnax Part #	TRI Part #	Raybestos Part #	O. D. (")	I. D. (")	Th. (")	Make	Application
B66250HTE	SX-23-4X70K	R475250K	11.125	10.000	0.070	GM / FORD / ZF	280mm LU (4L60-E), 298mm LU "VJCX", 300mm (4L60-E) / 4R100, 5R110W 6-Stud / ZF4HP24
B66260HTE	YX-23-21X70K	R475260K	10.500	9.000	0.070	AISIN AW & VW / TOYOTA	TR-60SN (VW 09D) / LEXUS A442F, A440L U140E / A750E
B66270HTE	SX-23-32X70K	R475270K	10.375	9.375	0.070	GM	265mm LU, 4T60E & 4T80E
B66280HTE	TX-23-11X70K	N/A	10.313	8.750	0.070	CHRYSLER	10" (254mm) LU, A-606, FWD
B66280HTE	YX-23-22X70K	R475280K	10.250	8.625	0.070	CHRYSLER / AISIAN AW / TOYOTA	10" LU / 55-50SN / A440F
B66290HTE	FX-23-63X70K	R475290K	9.625	8.375	0.070	FORD / MITSUBISHI	A4LD, 4R55E, 6F35 / F4/ R4A51, F5/R5A51
B66290HTE	NX-23-10X70K	R475290K	9.625	8.438	0.070	HONDA	Miscellaneous
B66300HTE	PX-23-9X70K	R475300K	9.500	8.250	0.070	ZF	ZF4HP22 JEEP A999
B66310HTE	JX-23-3X70T	R475310T	9.000	8.250	0.070	GM / JATCO	245mm LU/L4N71B RWD,DA-8
B66320HTE	SX-23-13X70K	R475320K	9.000	7.750	0.070	GM	245mm LU, Models: 125C, 180C, 200C, 440-R4, 700-R4 (S-10 Only)
B66330HTE	PX-23-10X70K	R475330K	10.150	9.360	0.070	ZF	ZF5HP30
B66340HTE	FX-23-88X70T	R475340T	9.812	9.063	0.070		JATCO NISSAN RE/L4F02A-RE/L4R01A
B66350HTE	SX-23-44X70K	R475350K	12.344	10.250	0.070	ALLISON	1000/2000/2400 SERIES
B66360HTE	YX-23-19K	R475360K	8.500	7.250	0.045	JATCO	L3N71B, DA-5
B66360HTE	YX-23-19X70K	R445360K	8.500	7.252	0.070	JATCO	L3N71B, DA-5
B66370HTE	NX-23-7X70K	R475370K	10.000	9.000	0.070	HONDA / MAZDA / FORD	HO-14 /MPYA /FNR5 (FS5A-EL)
B66390HTE	TX-23-6X70K	R475390K	9.000	8.000	0.070	MITSUBISHI	KM-176 LU, CT-11
B66450HTE	NX-23-9X70K	R475450K	9.875	8.875	0.070	HONDA	B7TA, B7VA, B7YA
B66500HTE	TX-23X70K	R475500K	10.500	9.125	0.070	CHRYSLER	10-3/4" LU, Early & Late
B66500HTS	TX-23-19X70HC	R475004HC	10.500	9.188	0.070	CHRYSLER	45RFE A518

LOCKUP LININGS LISTED BY SONNAX PART

Suffix Code Reminder: T - Tan, C - Carbon, HC - High Carbon, K - KEVLAR®, J - LockJoint™

BW / Sonnax Part #	TRI Part #	Raybestos Part #	O. D. (")	I. D. (")	Th. (")	Make	Application
B66520HTE	JX-23-8X70K	R475520K	9.250	7.875	0.070	CHRYSLER / MAZDA / FORD / TOYOTA	9-1/2" LU, A-470, A-670, A-604, FWD / G4A / FORD 4EAT / A540E
B66520HTE	YX-23-12X70K	R475520K	9.375	7.875	0.070	TOYOTA, AISIN AW, HYUNDAI KIA	LEXUS A540E, A960E/F (TB-65SN) U250E /TF-60SN (VW 09G) / A4CF1, A4CF2 A540E
B66551HTE	FX-23-28X70K	R475551K	11.250	10.000	0.070	FORD	AOD-E, 4R70W
B66606HTS	FX-23-74X70HC	N/A	8.080	6.930	0.070	FORD	6R60, 6R75W
B66606HTS	FX-23-74X70SHC	N/A	8.080	6.930	0.070	FORD	6R60, 6R75W
B66680HTE	SX-23-61X70K	N/A	9.813	8.562	0.070		
B66680HTS	SX-23-61X70HC	N/A	9.813	8.562	0.070	GM	6T40/6T45, 236mm
B66750HTS	FX-23-52X70HC	R475440HC	11.125	9.813	0.070	FORD	4R100, 5R110W, Early
B66930HTE	NX-23-12X70K	R475810K	10.250	9.250	0.070	HONDA / FORD / GM	40-25 / 6F50/6F55 / 6T70/6T75
B66930HTE	NX-23-5X70K	N/A	10.125	9.125	0.070	FORD / GM / HONDA	6F50/6F55, 6T70/6T75, G4
B66940HTE	YX-23-24X70K	R475860K	10.188	8.730	0.070	TOYOTA	LEXUS U660E
B66960HTE	FX-23-65X70K	N/A	10.125	9.000	0.070	FORD / GM / HONDA	HD3696-8-2 / 6L90 (Captive Clutch) / MPYA
B66965HTE	SX-23-52X70K	R475810K	10.313	9.250	0.070	GM / HONDA	SATURN / MDKA, MDRA (MDX)
B66970HTE	YX-23-25X70K	N/A	8.900	7.635	0.070	TOYOTA	LEXUS, A6GF1, U760E (TM-60LS)

LOCKUP LININGS LISTED BY RAYBESTOS PART

Suffix Code Reminder: T - Tan, C - Carbon, HC - High Carbon, K - KEVLAR®, J - LockJoint™

Raybestos Part #	TRI Part #	BW / Sonnax Part #	O.D. (")	I.D. (")	Th. (")	Make	Application
R445004HC	TX-23-19HC	N/A	10.500	9.188	0.045	CHRYSLER	45RFE A518
R445010K	FX-23-10K	B45010HTE	11.500	10.000	0.045	FORD	E4OD
R445015K	SX-23-66K	B45510HTE	11.750	10.250	0.045	GM	4L80E
R445020K	JX-23-23K	B45020HTE	10.750	9.500	0.045	JATCO	RE4R03A, DA-30 280mm
R445024HC	PX-23-11HC	B45690HTS	9.360	8.380	0.045	FORD / ZF	FOCUS FN / ZF5HP24
R445030K	FX-23-13K	B45030HTE	10.500	8.625	0.045	BORG WARNER	BTR LE85
R445040K	YX-23-1K	B45040HTE	10.000	8.250	0.045	FORD	A4LD, 4R55E
R445050K	JX-23-22K	B45050HTE	9.875	8.750	0.045	JATCO / MITSUBISHI	RE4R01A, DA-18, DA-48 / KM-175, KM-176
R445050K	JX-23-32K	B45050HTE	9.813	8.813	0.045	GM / JATCO / ZF	8L90 / RE4F04A/V, DA-37, DA-39, JF010E (RE0F09A), JF506E (with sensor ring), RE4R01A / ZF4HP16, ZF5HP19 (Single Friction)
R445060K	JX-23-33K	B45060HTE	9.750	9.000	0.045	JATCO	RL4F02A, DA-13, DA-11
R445070HC	PX-23-19HC	B45070HTS	9.710	8.190	0.045	FORD / TOYOTA / ZF	4R55E, 5R55E Late, A4LD / A140 / ZF6HP26 260mm
R445070K	FX-23-57K	B45070HTE	9.725	8.250	0.045	FORD / TOYOTA / CHRYSLER	4R55E, 5R55E Late, A4LD / A140 / 10" LU
R445071K	NX-23-8K	B45070HTE	9.750	8.313	0.045	HYUNDAI / FORD / CHRYSLER / TOYOTA	SONATA / 4R55E, 5R55E Late, A4LD / 10" LU / A140
R445071K	YX-23-3K	B45070HTE	9.750	8.250	0.045	FORD / TOYOTA / CHRYSLER	4R55E, 5R55E Late, A4LD / A140 / 10" LU
R445080K	FX-23-89K	B45080HTE	9.75	8.125	0.045		AXOD/E, CD4E, 9-1/4 & 10-1/4
R445084HC	SX-23-47HC	B45084HTS	11.625	10.375	0.045	GM	310mm 4L80-E, Early & Late
R445090K	NX-23-2K	B45090HTE	9.500	8.500	0.045	HONDA / VW / FORD / MAZDA	MISCEL., 96 LU (01M) / 4F27E (Focus) / FN4A-EL, G4A-EL & 4EAT-G, L/S, G4A-EL, Late
R445094HC	TX-23-20HC	N/A	4.938	4.438	0.045	CHRYSLER	Miscellaneous

LOCKUP LININGS LISTED BY RAYBESTOS PART

Suffix Code Reminder: T - Tan, C - Carbon, HC - High Carbon, K - KEVLAR®, J - LockJoint™

Raybestos Part #	TRI Part #	BW / Sonnax Part #	O.D. (")	I.D. (")	Th. (")	Make	Application
R445100K	FX-23-18K	B45100HTE	9.375	8.125	0.045	FORD	A4LD MULTI-CLUTCH 4.0
R445110K	JX-23-20K	B45110HTE	9.240	8.313	0.045	SUBARU / JATCO	RE4R01A / RL3F01A FWD, DA-6, RL4F02A DA-13
R445110K	TX-23-21K	B45110HTE	9.313	8.250	0.045	MITSUBISHI / SUBARU / JATCO	F4A42 '98 Galant / RE4R01A (Subaru) / RL3F01A FWD DA-6, RL4F02A, DA-13
R445120K	FX-23-6K	B45120HTE	9.250	8.125	0.045	FORD	AXOD / AXODE
R445130K	SX-23-31K	B45130HTE	8.875	8.000	0.045	GM	SATURN 228mm
R445150K	NX-23-1K	B45150HTE	8.750	7.750	0.045	HONDA / ZF	AS, F4 / ZF4HP22 BMW (BABY, 318), 254mm, BM-12
R445160K	JX-23-37K	B45160HTE	8.250	7.125	0.045	JATCO	L3N71B
R445160K	YX-23-2K	N/A	8.250	7.250	0.045	TOYOTA	A-131 LU
R445170K	FX-23-17K	B45170HTE	6.813	6.438	0.045	FORD	A4LD MULTI-CLUTCH 4.0
R445180K	TX-23-32K	B45180HTE	10.750	9.125	0.045	CHRYSLER	10-3/4" LU, Early & Late
R445190K	FX-23-26K	B45190HTE	10.563	9.313	0.045	FORD	AOD-E, 4R70W
R445190K	FX-23-26X70K	B66190HTE	10.563	9.313	0.070	FORD	AOD-E, 4R70W
R445190K	TX-22XK	B45190HTE	10.563	9.250	0.045	CHRYSLER	10-3/4" LU, Early & Late
R445200K	TX-23-17K	B45200HTE	10.000	8.750	0.045	CHRYSLER / HONDA	10" 41TE & 42LE, 62TE / B7TA, B7VA, B7YA
R445205K	TX-23-25K	B45205HTE	9.921	7.921	0.045	CHRYSLER	Miscellaneous
R445210K	TX-23-18K	B45210HTE	9.625	7.625	0.045	CHRYSLER	9-1/2" LU, A-470, A-670, A-604, FWD
R445220K	SX-23-48K	N/A	9.188	7.500	0.045	GM	HIGH PERFORMANCE 245mm LU
R445220K	TX-23-15K	B45220HTE	9.125	7.750	0.045	CHRYSLER	9-1/2" LU, A-470, A-670, A-604, FWD
R445220K	TX-23-16K	B45220HTE	9.125	7.813	0.045	CHRYSLER	10" (254mm) LU, A-606, FWD
R445240K	SX-23-25K	B45240HTE	11.580	10.313	0.045	GM	310mm 4L80-E, Early & Late
R445240T	SX-23-69T	B45240HTE	11.500	10.250	0.045	GM	4L80E DUAL STATOR, SINGLE STATOR

LOCKUP LININGS LISTED BY RAYBESTOS PART

Suffix Code Reminder: T - Tan, C - Carbon, HC - High Carbon, K - KEVLAR®, J - LockJoint™

Raybestos Part #	TRI Part #	BW / Sonnax Part #	O.D. (")	I.D. (")	Th. (")	Make	Application
R445250K	SX-23-4K	B45250HTE	11.125	10.000	0.045	GM / FORD / ZF	280mm LU (4L60-E), 298mm LU "VJCX", 300mm (4L60-E) / 4R100, 5R110W 6-Stud / ZF4HP24
R445260K	YX-23-21K	B45260HTE	10.500	9.000	0.045	AISIN AW & VW /TOYOTA	TR-60SN (VW 09D) / LEXUS A442F, A440L U140E / A750E
R445270K	SX-23-32K	B45270HTE	10.375	9.375	0.045	GM	265mm LU, 4T60E & 4T80E
R445280K	YX-23-22K	B45280HTE	10.250	8.625	0.045	CHRYSLER / AISIAN AW / TOYOTA	10" LU / 55-50SN / A440F
R445290K	FX-23-63K	B45290HTE	9.625	8.375	0.045	FORD / MITSUBISHI	A4LD, 4R55E, 6F35 / F4/ R4A51, F5/R5A51
R445290K	NX-23-10K	B45290HTE	9.625	8.438	0.045	HONDA	Miscellaneous
R445300K	PX-23-9K	B45300HTE	9.500	8.250	0.045	ZF	ZF4HP22 JEEP A999
R445310K	JX-23-3K	B45310HTE	9.000	8.250	0.045	GM / JATCO	245mm LU /L4N71B RWD, DA-8
R445320K	SX-23-13K	B45320HTE	9.000	7.750	0.045	GM	245mm LU, Models: 125C, 180C, 200C, 440-R4, 700-R4 (S-10 Only)
R445330K	PX-23-10K	B45330HTE	10.150	9.360	0.045	ZF	ZF5HP30
R445350K	SX-23-44K	B45350HTE	12.344	10.250	0.045	ALLISON	1000/2000/2400 SERIES
R445360K	YX-23-19X70K	B66360HTE	8.500	7.252	0.070	JATCO	L3N71B, DA-5
R445370K	JX-23-10K	B45064HTE	9.938	9.000	0.045	ZF/ CHRYS-LER / JATCO	ZF4HP22 / JEEP A999 / RL4F02A DA-11
R445370K	NX-23-7K	B45370HTE	10.000	9.000	0.045	HONDA / MAZDA / FORD	HO-14 /MPYA /FNR5 (FS5A-EL)
R445380T	FX-23-19T	B45380HTE	9.688	8.250	0.045	FORD	A4LD, 4R55E
R445390K	TX-23-6K	B45390HTE	9.000	8.000	0.045	MITSUBISHI	KM-176 LU, CT-11
R445400K	FX-23-12K	N/A	11.625	10.000	0.045	FORD	E4OD
R445420T	RX-23-1T	B45420HTE	7.500	6.688	0.045	RENAULT	DPO & AL4, Early
R445440HC	FX-23-52HC	B45750HTS	11.125	9.813	0.045	FORD	4R100, 5R110W, Early

LOCKUP LININGS LISTED BY RAYBESTOS PART

Suffix Code Reminder: T - Tan, C - Carbon, HC - High Carbon, K - KEVLAR®, J - LockJoint™

Raybestos Part #	TRI Part #	BW / Sonnax Part #	O.D. (")	I.D. (")	Th. (")	Make	Application
R445440K	FX-23-86K	B45410HTE	11.250	9.700	0.045	FORD	4R100, 5R110W Early
R445450K	NX-23-9K	B45450HTE	9.875	8.875	0.045	HONDA	B7TA, B7VA, B7YA
R445450K	TX-23-35K	B45450HTE	9.930	8.800	0.045		HONDA B7TA / VA / YA
R445460T	FX-23-24T	B45540HTE	9.125	8.063	0.045	FORD	CD4E
R445470K	FX-23-29K	N/A	9.000	7.875	0.045	FORD	AX4S / AX4N
R445490K	PX-23-24K	N/A	8.250	7.293	0.045	ZF	ZF6HP26 275mm
R445500K	TX-23XK	B45500HTE	10.500	9.125	0.045	CHRYSLER	10-3/4" LU, Early & Late
R445520K	JX-23-8K	B45520HTE	9.250	7.875	0.045	CHRYSLER / MAZDA / FORD / TOYOTA	9-1/2" LU, A-470, A-670, A-604, FWD / G4A / FORD 4EAT / A540E
R445520K	YX-23-12K	B45520HTE	9.375	7.875	0.045	TOYOTA, AISIN AW, HYUNDAI KIA	LEXUS A540E, A960E/F (TB-65SN) U250E / TF-60SN (VW 09G) / A4CF1, A4CF2 A540E
R445530K	YX-23-8K	N/A	10.125	8.250	0.045	TOYOTA	A-340H
R445540K	NX-23-6K	B45540HTE	9.125	8.125	0.045	HONDA	LU
R445551K	FX-23-28K	B45551HTE	11.250	10.000	0.045	FORD	AOD-E, 4R70W
R445570HC	FX-23-87HC	N/A	9.000	7.500	0.045		A4LDE, 4R/5R55E, 4F50N (AX4N), 5R55N/S/W
R445601K	SX-23-56K	B45002HTE	13.625	11.500	0.045	ALLISON	HD 4000 Series
R445611HC	SX-23-57HC	B45001HTS	11.570	10.000	0.045	ALLISON	MD 3000 Series
R445630K	FX-23-49K	N/A	10.850	9.800	0.045	FORD	4R100, 5R110W, Early
R445640T	SX-23-51T	B45640HTE	8.062	7.250	0.045	GM / TOYOTA / AISIN AW	CHEVY '04 / U440E / AW 80/81-40LE
R445670HC	SX-23-55HC	B45670HTS	10.100	7.500	0.045	GM	HIGH PERFORMANCE CORVETTE
R445680HC	SX-23-61HC	B45680HTS	9.813	8.562	0.045	GM	6T40/6T45, 236mm
R445810K	NX-23-12K	B45930HTE	10.250	9.250	0.045	HONDA / FORD / GM	40-25 / 6F50/6F55 / 6T70/ 6T75

LOCKUP LININGS LISTED BY RAYBESTOS PART

Suffix Code Reminder: T - Tan, C - Carbon, HC - High Carbon, K - KEVLAR®, J - LockJoint™

Raybestos Part #	TRI Part #	BW / Sonnax Part #	O.D. (")	I.D. (")	Th. (")	Make	Application
R445810K	SX-23-52K	B45965HTE	10.313	9.250	0.045	GM / HONDA	SATURN / MDKA, MDRA (MDX)
R445820K	TX-23-4K	N/A	10.750	9.250	0.045	CHRYSLER	10-3/4" LU, Early & Late
R445840K	JX-23-1K	N/A	8.365	7.550	0.045	JATCO	L3N71B, DA-5
R445860K	YX-23-24K	B45940HTE	10.188	8.730	0.045	TOYOTA	LEXUS U660E
R465000	TX-23-17X70MK	N/A	10.000	8.750	0.070	CHRYSLER	10” 41TE & 42LE
R470000	TX-23-19X70MK	N/A	10.500	9.188	0.070	CHRYSLER	45RFE A518
R475004HC	TX-23-19X70HC	B66500HTS	10.500	9.188	0.070	CHRYSLER	45RFE A518
R475010K	FX-23-10X70K	B66010HTE	11.500	10.000	0.070	FORD	E4OD
R475015K	SX-23-66X70K	B46610HTE	11.750	10.250	0.070	GM	4L80E
R475020K	JX-23-23X70K	B66020HTE	10.750	9.500	0.070	JATCO	RE4R03A, DA-30 280mm
R475024HC	PX-23-11X70HC	N/A	9.360	8.380	0.070	FORD / ZF	FOCUS FN / ZF5HP24
R475040K	YX-23-1X70K	B66040HTE	10.000	8.250	0.070	FORD	A4LD, 4R55E
R475050K	FX-23-83X70SK	N/A	9.880	8.750	0.007	FORD	6R80, 260mm (Late)
R475050K	JX-23-22X70K	B66050HTE	9.875	8.750	0.070	JATCO / MITSUBISHI	RE4R01A, DA-18, DA-48 / KM-175, KM-176
R475050K	JX-23-32X70K	B66050HTE	9.813	8.813	0.070	GM / JATCO / ZF	8L90 / RE4F04A/V, DA-37, DA-39, JF010E (RE0F09A), JF506E (with sensor ring), RE4R01A / ZF4HP16, ZF5HP19 (Single Friction)
R475060K	JX-23-33X70K	B66060HTE	9.750	9.000	0.070	JATCO	RL4F02A, DA-13, DA-11
R475070HC	PX-23-19X70HC	B66070HTS	9.710	8.190	0.070	FORD / TOYOTA / ZF	4R55E, 5R55E Late, A4LD / A140 / ZF6HP26 260mm
R475070K	FX-23-57X70K	B66070HTE	9.725	8.250	0.070	FORD / TOYOTA / CHRYSLER	4R55E, 5R55E Late, A4LD / A140 / 10" LU
R475071K	NX-23-8X70K	B66070HTE	9.750	8.313	0.070	HYUNDAI / FORD / CHRYSLER / TOYOTA	SONATA / 4R55E, 5R55E Late, A4LD / 10" LU / A140

LOCKUP LININGS LISTED BY RAYBESTOS PART

Suffix Code Reminder: T - Tan, C - Carbon, HC - High Carbon, K - KEVLAR®, J - LockJoint™

Raybestos Part #	TRI Part #	BW / Sonnax Part #	O.D. (")	I.D. (")	Th. (")	Make	Application
R475071K	YX-23-3X70K	B66070HTE	9.750	8.250	0.070	FORD / TOYOTA / CHRYSLER	4R55E, 5R55E Late, A4LD / A140 / 10" LU
R475084HC	SX-23-47X70HC	B66084HTS	11.625	10.375	0.070	GM	310mm 4L80-E, Early & Late
R475090K	NX-23-2X70K	B66090HTE	9.500	8.500	0.070	HONDA / VW / FORD / MAZDA	MISCEL., 96 LU (01M) / 4F27E (Focus) / FN4A-EL, G4A-EL & 4EAT-G, L/S, G4A-EL, Late
R475094HC	TX-23-20X70HC	N/A	4.938	4.438	0.070	CHRYSLER	Miscellaneous
R475100K	FX-23-18X70K	N/A	9.375	8.125	0.070	FORD	A4LD MULTI-CLUTCH 4.0
R475110K	TX-23-21X70K	B66110HTE	9.313	8.250	0.070	MITSUBISHI / SUBARU / JATCO	F4A42 '98 Galant / RE4R01A (Subaru) / RL3F01A FWD DA-6, RL4F02A, DA-13
R475110T	JX-23-20X70T	B66110HTE	9.240	8.313	0.070	SUBARU / JATCO	RE4R01A / RL3F01A FWD, DA-6, RL4F02A DA-13
R475120K	FX-23-6X70K	B66120HTE	9.250	8.125	0.070	FORD	AXOD / AXODE
R475130K	SX-23-31X70K	B66130HTE	8.875	8.000	0.070	GM	SATURN 228mm
R475150K	NX-23-1X70K	B66150HTE	8.750	7.750	0.070	HONDA / ZF	AS, F4 / ZF4HP22 BMW (BABY, 318), 254mm, BM-12
R475160K	JX-23-37X70K	B66160HTE	8.250	7.125	0.070	JATCO	L3N71B
R475160K	YX-23-2X70K	N/A	8.250	7.250	0.070	TOYOTA	A-131 LU
R475170K	FX-23-17X70K	B66170HTE	6.813	6.438	0.070	FORD	A4LD MULTI-CLUTCH 4.0
R475180K	TX-23-32X70K	B66180HTE	10.750	9.125	0.070	CHRYSLER	10-3/4" LU, Early & Late
R475190K	TX-22X70K	B66190HTE	10.563	9.250	0.070	CHRYSLER	10-3/4" LU, Early & Late
R475200K	TX-23-17X70K	B66200HTE	10.000	8.750	0.070	CHRYSLER / HONDA	10" 41TE & 42LE, 62TE / B7TA, B7VA, B7YA
R475205K	TX-23-25X70K	B66205HTE	9.921	7.921	0.070	CHRYSLER	Miscellaneous
R475210K	TX-23-18X70K	B66210HTE	9.625	7.625	0.070	CHRYSLER	9-1/2" LU, A-470, A-670, A-604, FWD
R475220K	SX-23-48X70K	N/A	9.188	7.500	0.070	GM	HIGH PERFORMANCE 245mm LU

LOCKUP LININGS LISTED BY RAYBESTOS PART

Suffix Code Reminder: T - Tan, C - Carbon, HC - High Carbon, K - KEVLAR®, J - LockJoint™

Raybestos Part #	TRI Part #	BW / Sonnax Part #	O.D. (")	I.D. (")	Th. (")	Make	Application
R475220K	TX-23-15X70K	B66220HTE	9.125	7.750	0.070	CHRYSLER	9-1/2" LU, A-470, A-670, A-604, FWD
R475220K	TX-23-16X70K	B66220HTE	9.125	7.813	0.070	CHRYSLER	10" (254mm) LU, A-606, FWD
R475240K	SX-23-25X70K	B66240HTE	11.580	10.313	0.070	GM	310mm 4L80-E, Early & Late
R475240T	SX-23-69X70T	B66240HTE	11.500	10.250	0.070	FORD	F-60 AODE, GM 4L80E DUAL STATOR, SINGLE STATOR
R475250K	SX-23-4X70K	B66250HTE	11.125	10.000	0.070	GM / FORD / ZF	280mm LU (4L60-E), 298mm LU "VJCX", 300mm (4L60-E) / 4R100, 5R110W 6-Stud / ZF4HP24
R475260K	YX-23-21X70K	B66260HTE	10.500	9.000	0.070	AISIN AW & VW / TOYOTA	TR-60SN (VW 09D) / LEXUS A442F, A440L U140E / A750E
R475270K	SX-23-32X70K	B66270HTE	10.375	9.375	0.070	GM	265mm LU, 4T60E & 4T80E
R475280K	YX-23-22X70K	B66280HTE	10.250	8.625	0.070	CHRYSLER / AISIAN AW / TOYOTA	10" LU / 55-50SN / A440F
R475290K	FX-23-63X70K	B66290HTE	9.625	8.375	0.070	FORD / MITSUBISHI	A4LD, 4R55E, 6F35 / F4/ R4A51, F5/R5A51
R475290K	NX-23-10X70K	B66290HTE	9.625	8.438	0.070	HONDA	Miscellaneous
R475300K	PX-23-9X70K	B66300HTE	9.500	8.250	0.070	ZF	ZF4HP22 JEEP A999
R475310T	JX-23-3X70T	B66310HTE	9.000	8.250	0.070	GM / JATCO	245mm LU /L4N71B RWD, DA-8
R475320K	SX-23-13X70K	B66320HTE	9.000	7.750	0.070	GM	245mm LU, Models: 125C, 180C, 200C, 440-R4, 700-R4 (S-10 Only)
R475330K	PX-23-10X70K	B66330HTE	10.150	9.360	0.070	ZF	ZF5HP30
R475340T	FX-23-88X70T	B66340HTE	9.812	9.063	0.070		JATCO NISSAN RE/ L4F02A-RE/L4R01A
R475350K	SX-23-44X70K	B66350HTE	12.344	10.250	0.070	ALLISON	1000/2000/2400 SERIES
R475360K	YX-23-19K	B66360HTE	8.500	7.250	0.045	JATCO	L3N71B, DA-5
R475370K	JX-23-10X70K	B66064HTE	9.938	9.000	0.070	ZF/ CHRYS-LER / JATCO	ZF4HP22 / JEEP A999 / RL4F02A DA-11

LOCKUP LININGS LISTED BY RAYBESTOS PART

Suffix Code Reminder: T - Tan, C - Carbon, HC - High Carbon, K - KEVLAR®, J - LockJoint™

Raybestos Part #	TRI Part #	BW / Sonnax Part #	O.D. (")	I.D. (")	Th. (")	Make	Application
R475370K	NX-23-7X70K	B66370HTE	10.000	9.000	0.070	HONDA / MAZDA / FORD	HO-14 /MPYA /FNR5 (FS5A-EL)
R475390K	TX-23-6X70K	B66390HTE	9.000	8.000	0.070	MITSUBISHI	KM-176 LU, CT-11
R475400K	FX-23-12X70K	N/A	11.625	10.000	0.070	FORD	E4OD
R475410K	FX-23-86X70K	N/A	11.250	9.700	0.070	FORD	4R100, 5R110W Early
R475420T	RX-23-1X70T	N/A	7.500	6.688	0.070	RENAULT	DPO & AL4, Early
R475440HC	FX-23-52X70HC	B66750HTS	11.125	9.813	0.070	FORD	4R100, 5R110W, Early
R475450K	NX-23-9X70K	B66450HTE	9.875	8.875	0.070	HONDA	B7TA, B7VA, B7YA
R475470K	FX-23-29X70K	N/A	9.000	7.875	0.070	FORD	AX4S / AX4N
R475490K	PX-23-24X70K	N/A	8.250	7.293	0.070	ZF	ZF6HP26 275mm
R475500K	TX-23X70K	B66500HTE	10.500	9.125	0.070	CHRYSLER	10-3/4" LU, Early & Late
R475520K	JX-23-8X70K	B66520HTE	9.250	7.875	0.070	CHRYSLER / MAZDA / FORD / TOYOTA	9-1/2" LU, A-470, A-670, A-604, FWD / G4A / FORD 4EAT / A540E
R475520K	YX-23-12X70K	B66520HTE	9.375	7.875	0.070	TOYOTA, AISIN AW, HYUNDAI KIA	LEXUS A540E, A960E/F (TB-65SN) U250E /TF-60SN (VW 09G) / A4CF1, A4CF2 A540E
R475530K	YX-23-8X70K	N/A	10.125	8.250	0.070	TOYOTA	A-340H
R475540K	NX-23-6X70K	N/A	9.125	8.125	0.070	HONDA	LU
R475551K	FX-23-28X70K	B66551HTE	11.250	10.000	0.070	FORD	AOD-E, 4R70W
R475561T	SX-23-LS45X70T	N/A	2.875	2.375	0.070	GM	298mm LU 250C, 350C, 700-R4, 4L60E
R475562T	SX-23-SS45X70T	N/A	2.188	1.563	0.070	GM	245mm LU, Models: 125C, 180C, 200C, 440-R4, 700-R4 (S-10 Only)
R475601HC	SX-23-56X70HC	B66002HTS	13.625	11.500	0.070	ALLISON	HD 4000 Series
R475630K	FX-23-49X70K	N/A	10.850	9.800	0.070	FORD	4R100, 5R110W, Early
R475810K	NX-23-12X70K	B66930HTE	10.250	9.250	0.070	HONDA / FORD / GM	40-25 / 6F50/6F55 / 6T70/6T75

LOCKUP LININGS LISTED BY RAYBESTOS PART

Suffix Code Reminder: T - Tan, C - Carbon, HC - High Carbon, K - KEVLAR®, J - LockJoint™

Raybestos Part #	TRI Part #	BW / Sonnax Part #	O.D. (")	I.D. (")	Th. (")	Make	Application
R475810K	SX-23-52X70K	B66965HTE	10.313	9.250	0.070	GM / HONDA	SATURN / MDKA, MDRA (MDX)
R475820K	TX-23-4X70K	N/A	10.750	9.250	0.070	CHRYSLER	10-3/4" LU, Early & Late
R475840K	JX-23-1X70K	N/A	8.374	7.000	0.070	JATCO	L3N71B, DA-5
R475860K	YX-23-24X70K	B66940HTE	10.188	8.730	0.070	TOYOTA	LEXUS U660E

LOCKUP PLATES OE DESIGN—PREMIUM QUALITY

MAKE	APPLICATION	ILLUSTRATION	PART #	PLATE DIM. O.D. × I.D. × TH. TEETH / LUGS	LINING PART # /QTY
AISIN AW	6F21WA MINI COOPER	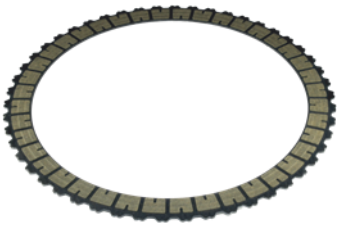	**AW-23-1**	9.17" x 7.64" x .16" 232.9mm x194.0mm x4mm 50 Teeth	**N/A**
	TR60SNVW 09D Eerly		**YX-26-3**	10.20" x 8.40" x .15" 259.1mm x213.4mm x3.8mm 36 Teeth	**N/A**
	TR60SNVW 09D Late		**VX-23-4**	7.03" x 5.60" x .10" 178.6mm x142.2mm x2.6mm 30 Teeth	**N/A**
AISIN SEIKI	AS68RC, A465		**YX-26-1**	7.43" x 5.80" x .10" 188.7mm x147.3mm x2.6mm 36 Teeth	**YX-23-23KK Kit, Includes 2 Linings)**
	AS69RC		**YX-26-7**	8.56" x 6.81" x .09" 219.7mm x172.0mm x2.3mm 36 Teeth	**N/A**
CHRYSLER	68RFE	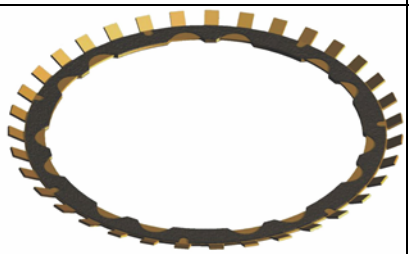	**TX-24-11**	12.60" x 10.16" x .17" 320.0mm x258.0mm x4.3mm 35 Teeth	**TX-23-26HC (2)**
FORD	4F50N (AX4N)		**FX-23-32**	9.55" x 7.87" x .94" 242.6mm x200.0mm x23.9mm 6 Lugs	**FX-23-29MK (2)**
	4F50N (AX4N), 5R55N, S, W		**FX-23-31**	9.55" x 7.87" x .94" 242.6mm x200.0mm x23.9mm 4 Lugs	**FX-23-29MK (2)**

LOCKUP PLATES OE DESIGN—PREMIUM QUALITY

MAKE	APPLICATION	ILLUSTRATION	PART #	PLATE DIM. O.D. × I.D. × TH. TEETH / LUGS	LINING PART # /QTY
FORD	4F50N (AX4N)		**FX-23-68K**	4 Lugs	**TX-23-5X70HC (1)**
	AX4S, AX4N (4F50N), CD4E, 9-1/4" (3.0L & 2.3L)		**FX-23-66K**	4 Lugs	**PX-23-9X70HC (1)**
	4R100, 5R110W	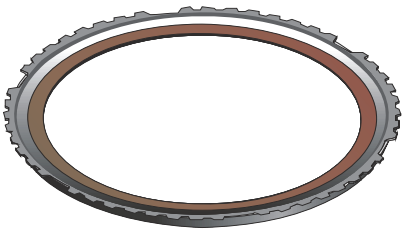	**FX-23-46**	12.14" x 9.80" x .104" 308.4mm x249.0mm x2.6mm 54 Teeth (6 Missing)	**FX-23-49K (1)**
	4R100, 5R110W	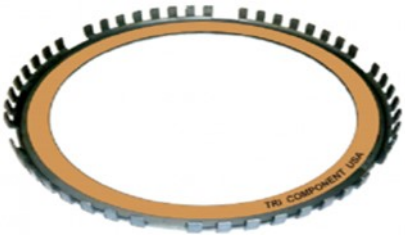	**FX-23-78**	12.14" x 9.80" x .104" 308.4mm x249.0mm x2.6mm 54 Teeth (6 Missing), Up-Bent	**FX-23-49T (1)**
	5R55N/S/W		**FX-23-53**	9.55" x 7.25" x .94" 242.6mm x184.2mm x23.9mm 4 Lugs	**FX-23-47MK (2)**
	5R55N/S/W		**FX-23-60K**	9.55" x 1.66" x .27" 242.6mm x42.2mm x6.9mm 4 Lugs	**TX-23-5X70HC (1)**
	6R75, 6R80		**FX-26-4**	9.64" x 6.5" x .16" 244.9mm x165.1mm x4.1mm	**N/A**

LOCKUP PLATES OE DESIGN—PREMIUM QUALITY

MAKE	APPLICATION	ILLUSTRATION	PART #	PLATE DIM. O.D. × I.D. × TH. TEETH / LUGS	LINING PART # /QTY
FORD	6R80, 260mm (Late)	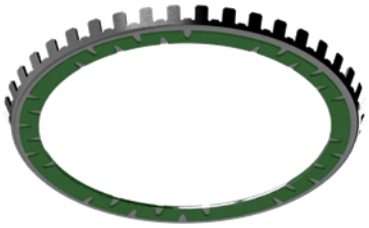	**FX-26-2**	10.78" x 8.70" x .16" 273.8mm x221.0mm x4.1mm Teeth 40	**FX-23-83SK**
	6R80, 280mm (Late)	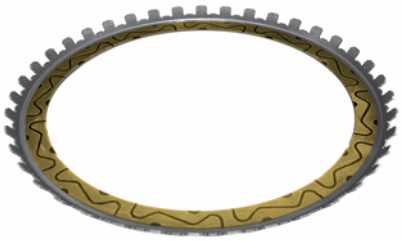	**FX-26-3**	11.34" x 9.15" x.16" 288.0mm x232.4mm x4.1mm Teeth 40	**FX-23-80SK OR FX-23-80MK**
	E4OD		**FX-23-43**	5 double springs	**FX-23-10K (1)**
	6R140	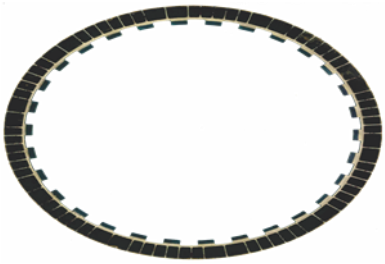	**FX-23-81**	11.50" x 9.77" x .12" 292.1mm x248.2mm x3mm 30 Teeth	**N/A**
	6R60,6R75W		**FX-26-1**	O.D. 8.071" - 221.2mm	**FX-23-74MK OR FX-23-74SK**
GM	6L45		**SX-26-1**	8.70" x 6.30" x .14" 220.1mm x160.0mm x3.6mm	**PX-23-25MK**
	8L90		**SX-26-2**	10.37" x 8.51" x .16" 263.4mm x216.2mm x4mm 30 Teeth	**SX-23-70MK**

LOCKUP PLATES OE DESIGN—PREMIUM QUALITY

MAKE	APPLICATION	ILLUSTRATION	PART #	PLATE DIM. O.D. × I.D. × TH. TEETH / LUGS	LINING PART # /QTY
JATCO	RE5R05A		**JX-23-34**	6.47" x 5.13" x .07" 164.3mm x130.3mm x1.8mm 40 Teeth	**32 Segments N/A**
	RE7R01A (JR710E)		**JX-23-38**	6.82" x 5.14" x .07" 173.2mm x130.6mm x1.8mm 24 Teeth	**40 Segments**
MERCEDES	722.6 & 722.9, 290mm	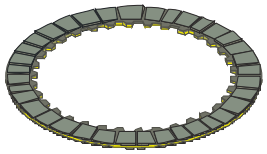	**HX-23**	6.93" × 5.29" × .09" 176.0mm x134.4mm x2.3mm 34 Teeth	**36 Segments N/A**
		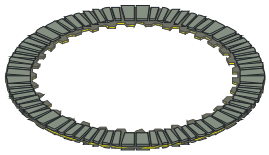	**HX-23-9**	6.93" × 5.29" × .09" 176.0mm x134.4mm x2.3mm 34 Teeth	**72 Segments N/A**
	722.6 & 722.9, 272mm		**HX-23-4**	6.93" × 5.29" × .11" 176.0mm x134.4mm x2.8mm 34 Teeth	**36 Segments N/A**
		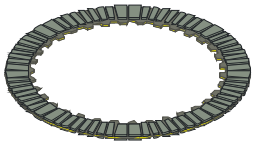	**HX-23-8**	6.93" × 5.29" × .11" 176.0mm x134.4mm x2.8mm 34 Teeth	**72 Segments N/A**
	722.9 Late 7G-Tronic		**HX-23-16**	7.72" × 6.10" × .11" 196.0mm x155.0mm x2.8mm 40 Teeth	**72 Segments N/A**
	Class A, 722.7 '98-02 5 Speed	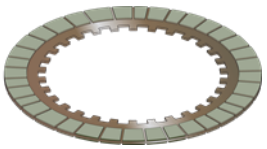	**HX-23-7**	6.93" × 4.72" × .11" 176.0mm x120.0mm x2.8mm 30 Teeth	**36 Segments N/A**

LOCKUP PLATES OE DESIGN—PREMIUM QUALITY

MAKE	APPLICATION	ILLUSTRATION	PART #	PLATE DIM. O.D. × I.D. × TH. TEETH / LUGS	LINING PART # /QTY
RENAULT PEUGEOT (AL4) CIT-ROEN	DPO	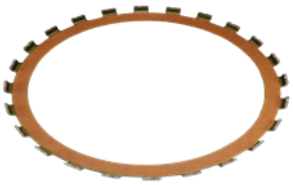	**RX-26-1**	7.87" x 6.65" x .145" 200.0mm x168.9mm x3.7mm 24 Teeth	**RX-23-1 (2)**
	DPO, Late		**RX-26-2**	8.54" x 7.10" x .73" 217.0mm x180.0mm x18.6mm 24 Teeth	**RX-23-2KK (Kit, Includes 2 Linings)**
ZF	ZF5HP19FL	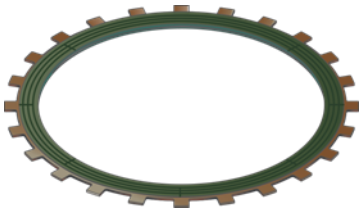	**PX-26-8**	10.21" x 8.15" x .14" 259.3mm x207.0mm x3.6mm 24 Teeth	**PX-23-14MK (2)**
	ZF5HP19FL, DIESEL, AUDI	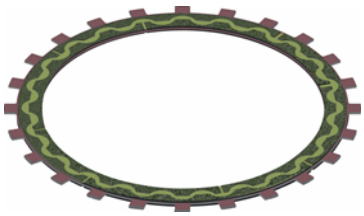	**PX-26-7**	10.21" x 8.15" x .14" 259.3mm x207.0mm x3.6mm 24 Teeth	**PX-23-12MK (2)**
	ZF5HP24 BMW X5, 4.6L ZF6HP26 (280mm)	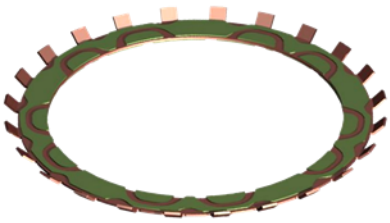	**PX-26-9**	11.32" x 8.77" x .16" 287.5mm x222.8mm x4mm 24 Teeth	**PX-23-18HC (Solid) (2)**
	ZF5HP24, JAG-UAR, BM-64	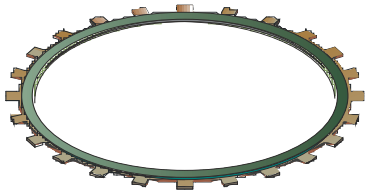	**PX-26-6**	10.21" x 8.38" x .12" 259.3mm x212.9mm x3.0mm 24 Teeth	**PX-23-11K (2)**
	ZF5HP30, 5 Speed, BM-29, BMW 540I, 1993	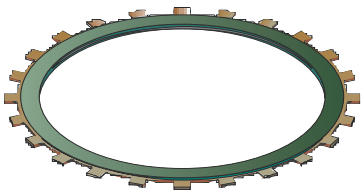	**PX-26-3**	11.04'" x 9.36" x .12" 208.4mm x237.7mm x3.0mm 24 Teeth	**PX-23-10K (2)**

LOCKUP PLATES OE DESIGN—PREMIUM QUALITY

MAKE	APPLICATION	ILLUSTRATION	PART #	PLATE DIM. O.D. × I.D. × TH. TEETH / LUGS	LINING PART # /QTY
ZF	ZF6HP19 525i, 530i BMW ZF6HP19 245mm	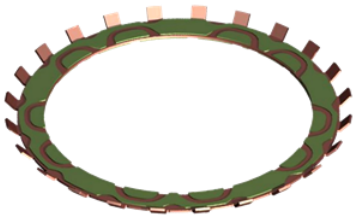	**PX-26-11**	9.85" x 7.87" x .16" 250.2mm x200.0mm x4mm 24 Teeth	**PX-23-20HC (Solid) (2)**
	ZF6HP19	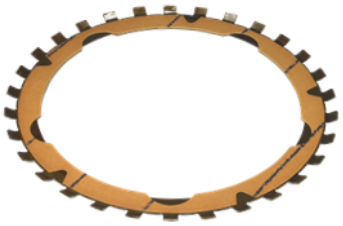	**PX-26-16**	9.36” x 7.33” x .28” 237.7mm x186.2mm x7.1mm 30 Teeth	**PX-23-26T**
	ZF6HP19, 245mm (LuK)		**PX-26-21**	8.67" x 6.30" x .14" 220.2mm x160.0mm x3.6mm	**PX-23-25MK?**
	ZF6HP21, 245mm (LuK)		**PX-26-20**	8.67" x 4.24" x .14" 220.2mm x107.7mm x3.6mm Bolt Circle Dia.: 4.975"	**PX-23-25MK**
	ZF6HP26, 255mm & 245mm, Jaguar 2.7 V6	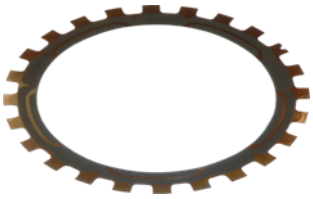	**PX-26-12**	8.08" x 6.30" x .14" 205.2mm x160.0mm x3.6mm 24 Teeth	**PX-23-22HC (Solid) (2)**
	ZF6HP26, 275 mm	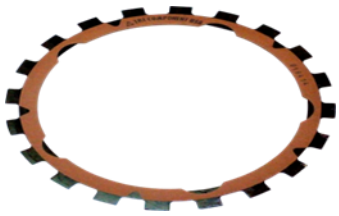	**PX-26-15**	9.06" x 7.30" x .11" 230.1mm x185.4mm x2.8mm 24 Teeth	**PX-23-24T (2)**
	ZF6HP26, 260mm BMW 745, Jaguar S, XK8 Audi A8	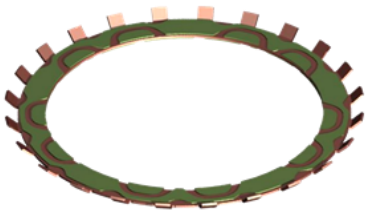	**PX-26-10**	10.63" x 8.19" x .16" 270.0mm x208.0mm x4mm 24 Teeth	**PX-23-19HC (Solid) (2)**

BONDING PROCEDURE

Follow basic degreasing procedure - if necessary; spray wash, alkaline tank, etc.

Follow derusting procedure - if necessary.

Remove old lining: either by hot alkaline tank soak, machining, or grinding.

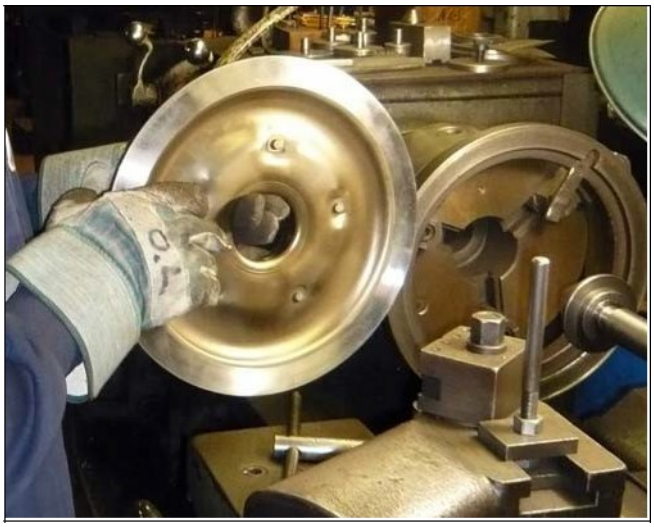

4. Degrease piston bonding surface as follows: use rubber gloves, clean paper towels and degreasing solution in a well-ventilated area. Note: degreaser should be solvent based, not water based. Any quality commercial solvent, which does not leave a residue and dries in a reasonable time, can be used (Tri Component can recommend a non flammable spray can degreaser). Saturate one paper towel with degreaser and wipe bonding surface of piston in a circular motion. Keep folding the paper towel to expose a new clean surface as it gets dirty. Operation is finished when the paper towel no longer gets dirty. Note: MEK may be used as a degreaser, but should not be used directly on the lining, nor should any other activator be used on the lining.

4A Bond Aid prep (optional). Apply a light film of Tri bond Aid™ products with a brush - allow to dry thoroughly. Optimum drying temperature is 180ºF.

5. **Tacking procedure** if used: place 2-4 small drops of any bonding adhesive (thin lines are preferable) equally spaced around the steel surface (see pages 54-55**)**. Centrally locate the lining, glue side down, on the bonding surface of the piston. Press down on the lining carefully, trying not to smear any glue onto the unglued surface of the lining. Let dry (approx. 2-4 minutes) until lining doesn't shift when touched or when placed into press.

6. **Bonding Procedure:**

a. Place piston face up onto bottom fixture, which has been preheated for at least one bonding cycle.

b. If lining has not been pre-tacked, place lining-glue side down concentric with piston.

c. Check timer setting: this has to be determined by experimenting once with each type of piston. Using a thermocouple meter and a thin thermocouple wire, place tip under lining where glue has been scraped off (so as not to bond thermocouple wire) to monitor piston temperature. Plot the temperature on the bonding curve every 30 sec., until 400°F is reached. The piston must not heat up too quickly - or too slowly. It must pass through the flow zone and stay there for at least 1 to 2 minutes (see Bonding Curve). Most commercial piston bonders using aluminum attached fixtures heat up very rapidly. To slow down the heat transfer, a .070" lining (or unglued spacer) can be placed under the piston or attached to the upper fixture above the lining. It should take from 6 -12 minutes to produce a quality bond, depending on clutch size.

Add additional time for large pistons or covers. Use Tempilaq (a liquid paint which is available from TRI) to determine end of bond cycle when piston reaches 400°F. The longer it stays in the cure zone (above 375°F), the stronger the bond.

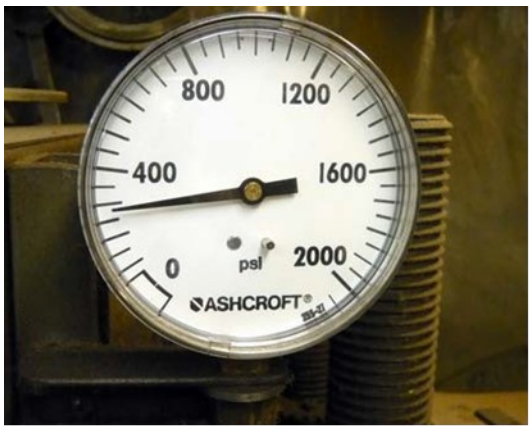

d. Check temperature settings: a good starting point is top platen: 425°F, bottom platen: 450°F. This can be adjusted as necessary depending on curve plotted on the bonding chart.

Tempilaq® (which melts and changes color at one specific temperature) can also be used to get a general idea of piston temperature vs. time. For example: by using one at 250°F, another at 350°F, and another at 400°F, one can see how long it takes to reach these temperatures. Tempilac 400 is most commonly used.

e. Pressure setting: the lining itself should be approximately 100 - 150 pounds per square inch. This can be determined as follows:

Total machine force "F" (in pounds) divided by lining cross section "A" (in square inches) equals pressure "P" applied to lining (in pounds per square inch):

$$P = F / A$$

Calculate area of lining cross section as follows:

Area O.D. — Area I.D. = Area of cross section.

(Area of lining outside diameter minus area of lining inside diameter equals lining cross section.)

Area = diameter squared times 0.785 (see below).

Area = πR2 = π(D/2)2 = π(D2/4) = (π/4)D2 = (π/4=3.14/4=0.785)D2 = 0.785D2

For example:

A large GM lining:

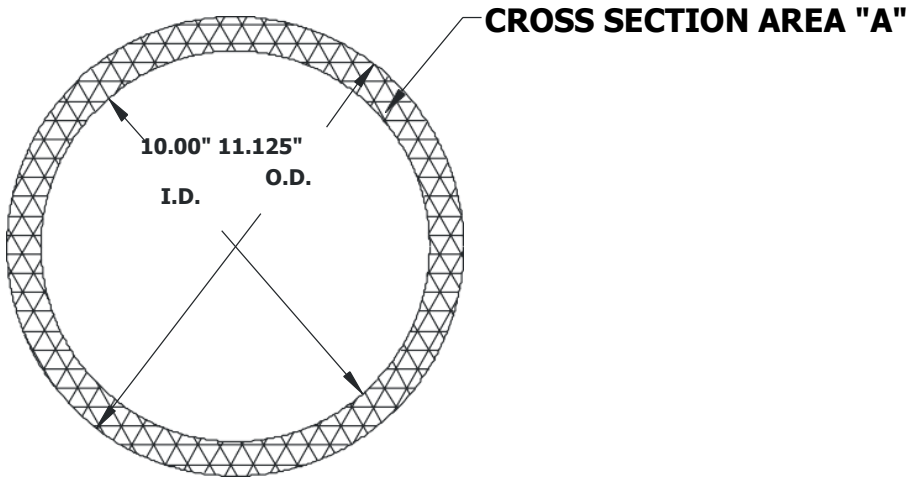

O.D. = 11.125", outer area = 0.785(11.125")2 -= 97.0 square inches. I.D. = 10.00", inner area = 0.785(10.000")2 -= 78.5 square inches. Area of the cross section (A) = 97.0 - 78.5 = 18.5 square inches.

Example of Calculating Machine Force:

F = P1 x A

Area of RAM "A" (machine piston) times air pressure "P1" equals total machine force "F". RAM Dia. = 6", RAM Area "A" = 28.25 sq.inch (see chart below).

RAM Dia. (inch.)	RAM Area "A" (sq. inch.)
4"	12.5
5"	19.6
6"	28.25
7"	38.5
8"	50.25

Air pressure "P1" = 100 Psi

Force "F" = P1 x A = 100 x 28.25 = 2,825 lb of total machine force.

Pressure applied to lining: P = Total machine force F/ Lining cross section area A . **P=F/A = 2,8125 Lbs. / 18.5 sq.inch = 153 Lbs./sq.inch** (applied to the lining) This is more than adequate for bonding purposes.

f. Remove piston and let cool - do not force cool.

7. Testing:

a. The first and last piece of each day's piston-type production run should be given a destructive test.

Secure the piston on a workbench with one edge against a fixed surface. Take a wide chisel and using a rubber mallet, hit the lining at a 45-degree angle. If the lining edge breaks off, but the glue remains bonded, the bond is good. Also, use a large box cutter or knife, slightly dulled, and scrape away the lining where the edge has been chisel tested, (or anywhere on the lining) and see if the glue remains bonded to the piston. If it does, the bond is good. All safety measures must be observed.

Note: if the lining comes off clean, either with the chisel test, or the knife test, the bond is not good. First double-check the degreasing procedure just prior to bonding. This is very critical. Also, the parts should be degreased as close to being bonded as practical. The longer the clean surface remains exposed the greater the possibility of getting contaminated. This is especially possible in a high humidity area.

b. The first piece destructive test should also be used to test for compression. Measure lining height (use a micrometer to measure the thickness of the bonded lining and the metal thickness of the piston. Scrape off the lining down to the metal and measure the metal thickness. Subtract the metal thickness from the combined

thickness and get a number for the bonded lining thickness alone. Compare this thickness with a sample of an unglued lining. The amount of compression should be from 15-20 %

% of compression = uncompressed lining - compressed lining divided by uncompressed lining x 100

For example: for .045" thick lining, which has been compressed to .035" thick:

% of compression = (1.00 - .035/.045) x 100 = 22.2 % compression This is more than enough for a quality bond.

c. Non-destructive testing:

Some people like to use compressed air against the lining and by listening to the sound can tell if the bond is bad. This only works if the lining is totally unbonded across the entire surface thereby allowing air to travel under the lining and make a whistling noise. Another method is the "metal finger" test .By using 0.020 feeler stock, or any thin metal edge with a grip or tape attached: apply pressure at a 30-45 degree angle against the outer edge of the bonded lining, being careful not to damage the lining. If the metal finger goes under the lining, the bond is not good. Note: sometimes the finger may go in only at only one point. This can be due to a thumbprint which was made after degreasing.

8. Set-up of fixtures: checking for clearance it is extremely important. Each fixture setup must be checked for any interference between the fixture and the lining and piston bottom, especially mounting screws, etc. Any interference will cause uneven pressure or partial bonding.

HOW TO CHECK YOUR SYSTEM.

1. Make the temperature test under normal loads and production operating conditions.
2. Hollow out the back of the friction material large enough to insert a thermocouple at the bond line. Attach thermocouple to a pyrometer, calibrated to indicate temperatures directly. Put clutch assembly in press. Position pyrometer so it can be read easily during the test.
3. Once you have set temperatures controls and cycle time, do not change them during the test.
4. Give the heating unit time to reach normal operating temperature before starting the test.

HOW TO PLOT CURE CHART.

1. Take temperature readings every 30 - 60 Sec.
2. Mark temperature readings on the chart with an X. If the 1-minute reading is 180°, mark an X at the intersection of the lines running up from 1 minute and over from 180°.
3. Draw a curve connecting the X's. At the point your curve joins Line ABC, read the time on the scale at the bottom of the chart. This the **minimum** time you can use to get the good quality bond at the temperature setting you have chosen. This procedure is a recommended starting point, further testing may be required to assure good bonds.
4. If the bonding curve follows the left side of the chart and goes into the shaded areas, the clutch is heating up too quickly; if the curve goes into the shaded area on the right — it is heating up too quickly.
5. Commercial hand-help infra-red instruments are available for temperature readiness but there accuracy cannot be confirmed.

WARNING:

These data are based on tests believed to be reliable. However, these are laboratory tests that may not reflect actual conditions. The data is for your information and no warranty, express or implied, is made as we cannot guarantee the results of operations not under our direct control.

ADHESIVE CURE CHART

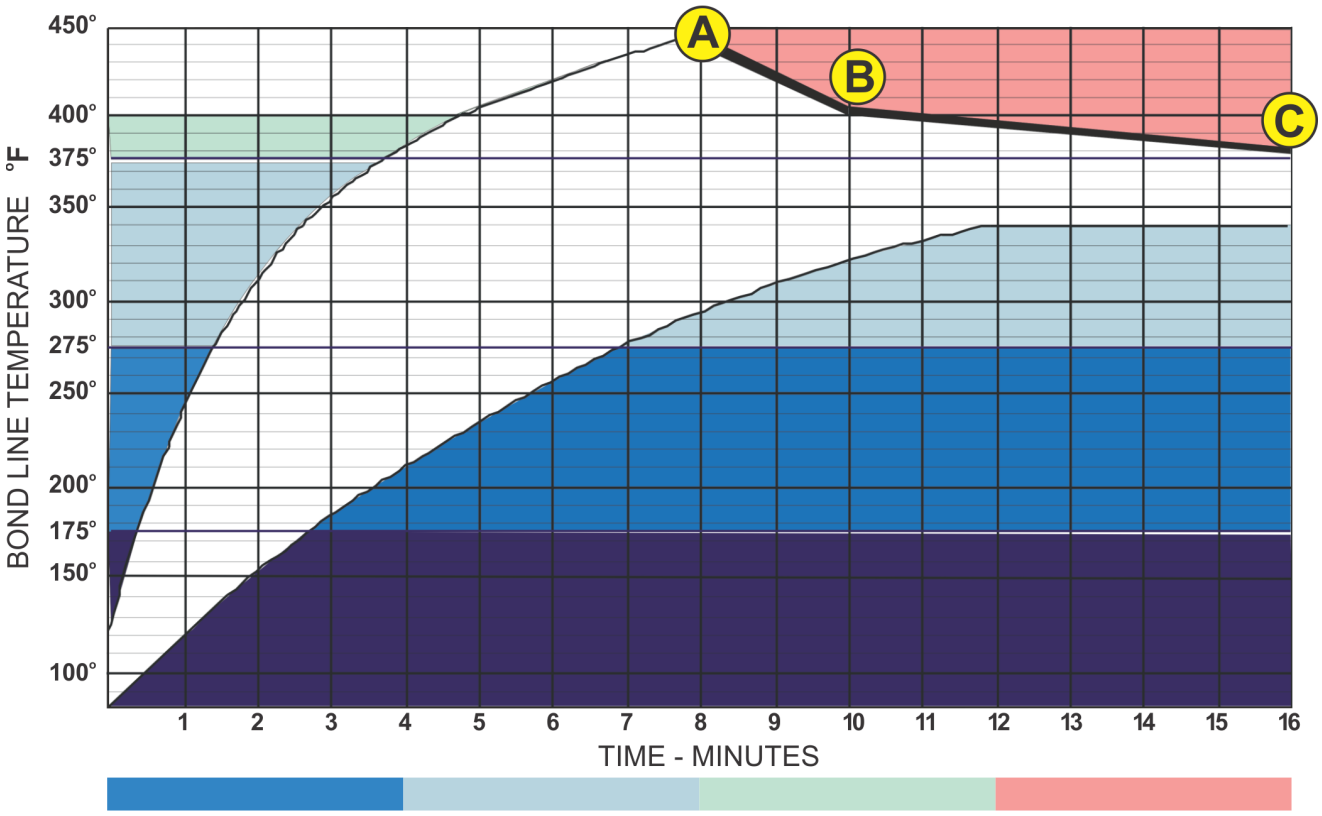

Flow zone – 175° to 275° Should remain 1 to 2 minuts in this zone. Pressure is important.

Partial bond– 275° to 375° Week bond will result if cure is stoped in this range.

Minimum bonding temperatures– 375° to 400°

End of bonding cycle area which must be reached to obtain high quality heat-resistant bond

EXAMPLE OF BOND PLOT

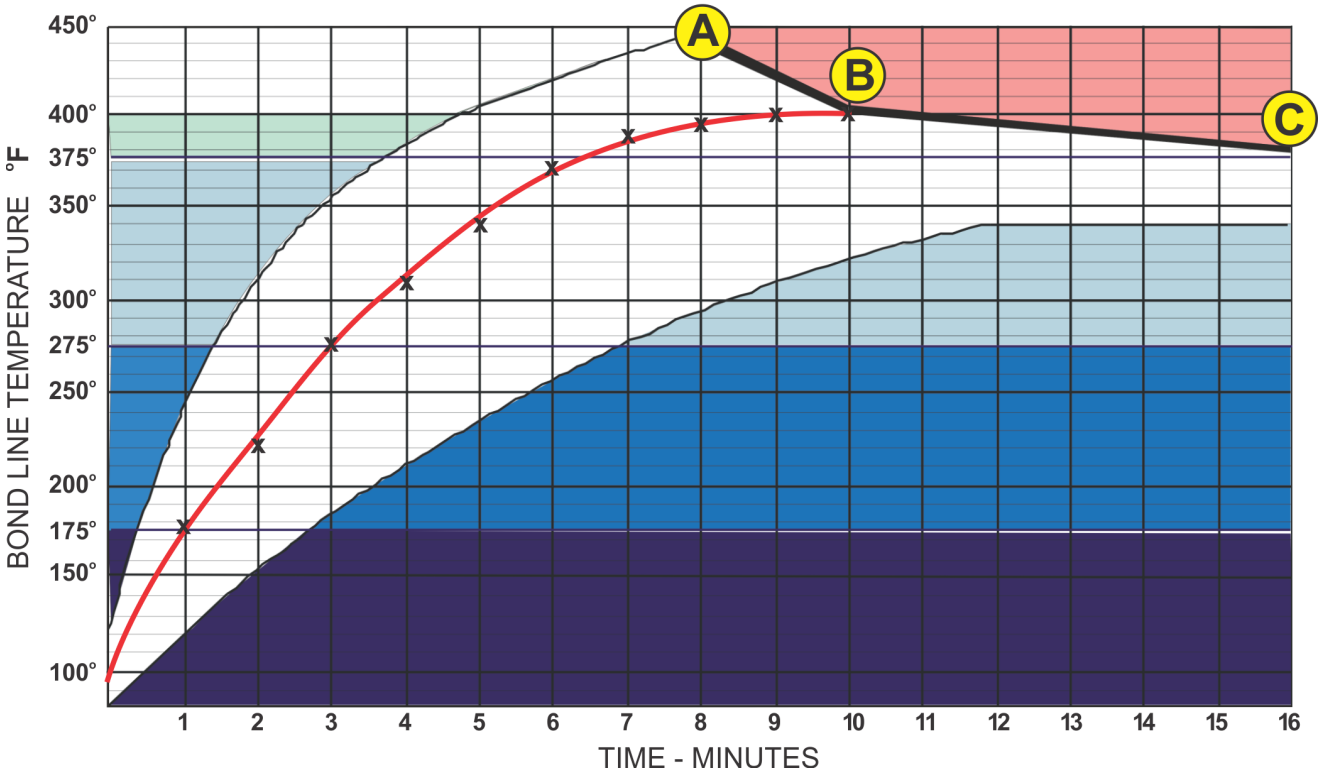

TYPYCAL BONDING PARAMETERS

BASED ON 150 PSI ON LINING SURFACE

Basic Part Number	O.D. (inch)	Lining Area (SI)	Minimum 4" Dia. Cylinder Pressure (PSI)	Minimum 6" Dia. Cylinder Pressure (PSI
FX-23-10	11 - 1/2	25.32	302	134
FX-23-12	11 - 5/8	27.59	329	146
FX-23-13	10 - 1/2	28.15	336	149
FX-23-17	6 - 13/16	3.90	47	21
FX-23-18	9 - 3/8	17.17	205	91
FX-23-19	9 - 11/16	20.23	242	107
FX-23-23	11 - 3/16	13.74	164	73
FX-23-24M	9 - 1/8	14.34	171	76
FX-23-25M	9 - 5/8	21.70	259	115
FX-23-26M	10 - 9/16	19.50	233	104
FX-23-27	11 - 3/8	23.07	276	122
FX-23-28M	11 - 1/4	20.85	249	111
FX-23-29M	9	14.90	178	79
FX-23-47M	8 - 1/4	11.81	141	63
FX-23-6	9 - 1/4	15.34	183	81
JX-23-1	8 - 3/8	10.90	130	58
JX-23-10	9 - 15/16	13.93	166	74
JX-23-15	9 - 1/2	11.61	139	62
JX-23-20	9 - 1/4	12.93	154	69
JX-23-22	9 - 7/8	16.45	196	87
JX-23-23	10 - 3/4	19.87	237	105
JX-23-24	8 - 1/4	7.79	93	41
JX-23-3	9	10.16	121	54
JX-23-32	9 - 13/16	14.62	175	78
JX-23-8	9 - 1/4	18.48	221	98
NX-23-1	8 - 3/4	12.95	155	69
NX-23-2	9 - 1/2	14.13	169	75
NX-23-5	10 - 1/8	15.11	180	80
NX-23-6	9 - 1/8	13.54	162	72
PX-23-10	10 - 5/32	12.10	144	64
PX-23-11	9 - 23/64	13.58	162	72
PX-23-12	9 - 7/16	18.09	216	96
PX-23-9	9 - 1/2	17.42	208	92
RX-23-1	7 - 1/2	9.05	108	48
SX-23-13	9	16.44	196	87

TYPYCAL BONDING PARAMETERS

BASED ON 150 PSI ON LINING SURFACE

Basic Part Number	O.D. (inch)	Lining Area (SI)	Minimum 4" Dia. Cylinder Pressure (PSI)	Minimum 6" Dia. Cylinder Pressure (PSI
SX-23-25	11- 9/16	15.28	183	81
SX-23-31	8 - 7/8	11.59	138	62
SX-23-32	10 - 3/8	15.50	185	0
SX-23-35	12 - 5/8	35.47	424	188
SX-23-38	13	48.17	575	256
SX-23-4	11 - 1/8	18.66	223	99
SX-23-40	12 - 11/32	42.58	509	226
SX-23-42	8	18.34	219	97
SX-23-46	13 - 1/2	39.25	469	208
SX-23-47	11 - 5/8	21.59	258	115
SX-23-48HC	9 - 3/16	22.10	264	117
SX-23-LS45	2 - 7/8	2.06	25	11
SX-23-SS45	2 - 3/16	1.84	22	10
TX-22X	10 - 9/16	22.21	265	118
TX-23-11	10 - 5/16	23.37	279	124
TX-23-12	9 - 3/8	21.85	261	116
TX-23-13	10 - 1/8	28.65	342	152
TX-23-14	10 - 3/4	27.13	324	144
TX-23-15	9 - 1/8	18.21	218	97
TX-23-16	9 - 1/8	17.46	208	93
TX-23-17	10	18.40	220	98
TX-23-18	9 - 5/8	27.10	324	144
TX-23-19X70	10 - 1/2	20.29	242	108
TX-23-4	10 - 3/4	23.55	281	125
TX-23-5	9 - 1/8	19.72	236	105
TX-23-6	9	13.35	159	71
TX-23-9	9 - 5/8	22.48	269	119
TX-23X	10 - 1/2	21.18	253	112
YX-23-1	10	25.07	299	133
YX-23-10	10 - 1/16	22.76	272	121
YX-23-11	10 - 1/8	22.08	264	117
YX-23-12	9 - 3/8	20.31	243	108
YX-23-2	8 - 1/4	13.58	162	72
YX-23-3	9 - 3/4	21.20	253	113
YX-23-7	10 - 3/8	26.10	312	139
YX-23-8	10 - 1/8	27.05	323	144

PRODUCTION SUPPLIES

Tri Component materials and supplies are the same products as used in Tri manufacturing.

Instant Shudder Fix p/n **SP89610** is a concentrated friction modifier for eliminating torque converter shudder problems instantly add to transmission fluid.

TK-700 BOND AID™ high solids black adhesive, I quart, black color, free of hazardous fumes. Highest shear strength in the industry. Used straight- do not dilute. No known solvent. Bonding cycle same as usual.

Tri Component linings have an adequate adhesive coating and no supplements are needed if recommended procedures are observed.

However, some rebuilders feel more secure applying additional adhesive on a properly prepared surface. All Tri adhesive products can serve this purpose.

Allow such coats to dry before bonding. This prevents outgassing.

TK-770 BOND AID™ same black adhesive in 8oz container. Excellent for tacking linings to prevent shifting just 3 or 4 drops on the steel surface will hold the lining in place. No need to breathe noxious MEK fumes.

PRODUCTION SUPPLIES

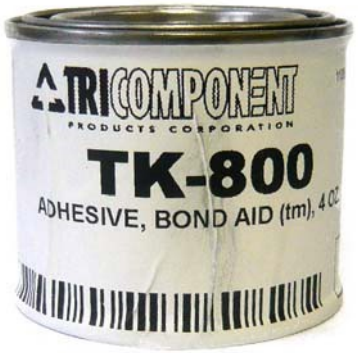

TK-1000 BOND AID™ Ultra Red, 8oz. this red color, solvent adhesive can be used straight. Being concentrated, it may be diluted with pure denatured ethyl alcohol, which is not noxious. Some rebuilders have been purchasing a bonding "prep" which can no longer be shipped.

TK-1000 avoids this problem. The user dilutes according to preference. Typical dilution: 4-8oz per gallon. The red color is an aid to help assure full coverage. This breakthrough will save money over the non-available "prep" products.

TK-1000 is compatible with all other adhesives systems when dried. In the liquid state it may only be mixed with ethyl alcohol. Correct bonding procedure will be found in this manual.

No noxious MEK is required for use in Tri adhesive systems. If desired, MEK may be used for cleaning steel surfaces with proper ventilation, but there are numerous, less noxious cleaners used in the industry.

TK-800 BOND AID™ same adhesive in 4oz container

TK-1032 BOND AID™ same adhesive in 32oz container. Above alcohol based adhesives may be used for tacking purposes.

Tempilaq® 400 F liquid temperature indicator, part No **Tempilaq-400 F**. A small dab of Tempilaq is applied to the cold clutch piston plate outside edge. The green color will turn black if bonding temperature has been reached.

This is vital in changing setups and in periodic quality assurance. Electronic measuring devices are available but Tempilaq will be found to be convenient, inexpensive and effective. See page 48 of this manual.

GROOVED AND SPECIAL DESIGN LININGS

Tri is the leader supplier of special design, grooved linings for numerous OE applications. Tri grooved linings designs are identical to OE designs. OE grooving is an integral part of the entire trans-mission hydraulic system and is a critical component need-ed to achieve OE performance.

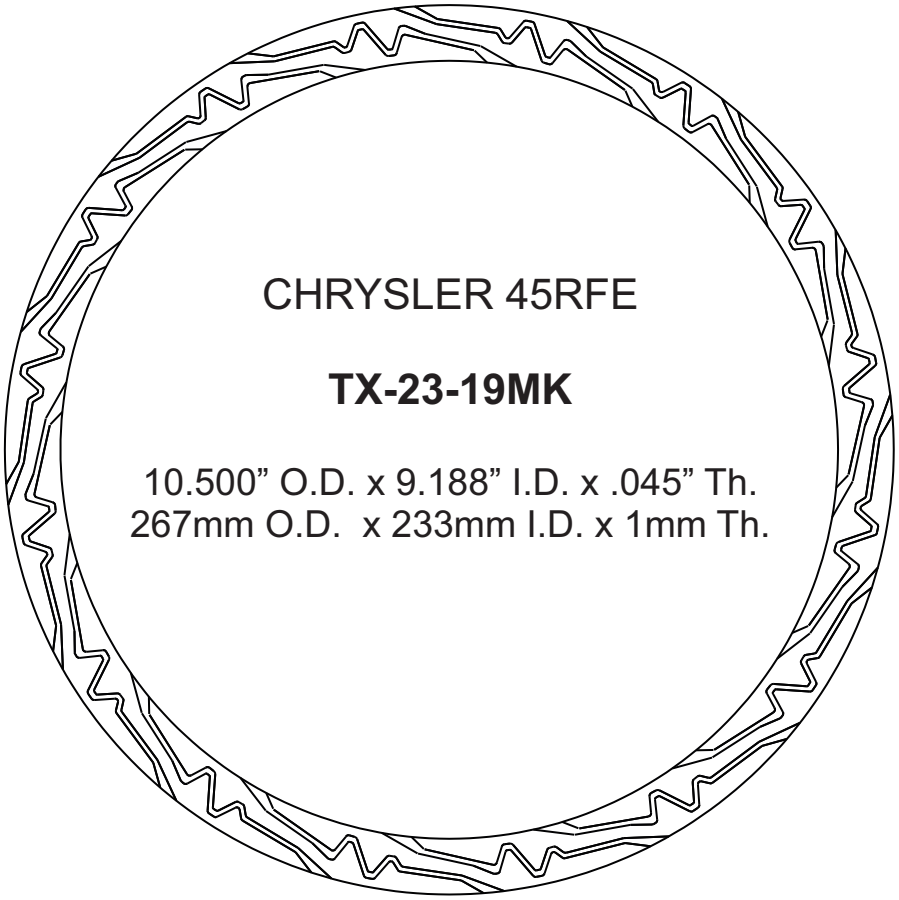

CHRYSLER 45RFE

TX-23-19MK

10.500” O.D. x 9.188” I.D. x .045” Th.
267mm O.D. x 233mm I.D. x 1mm Th.

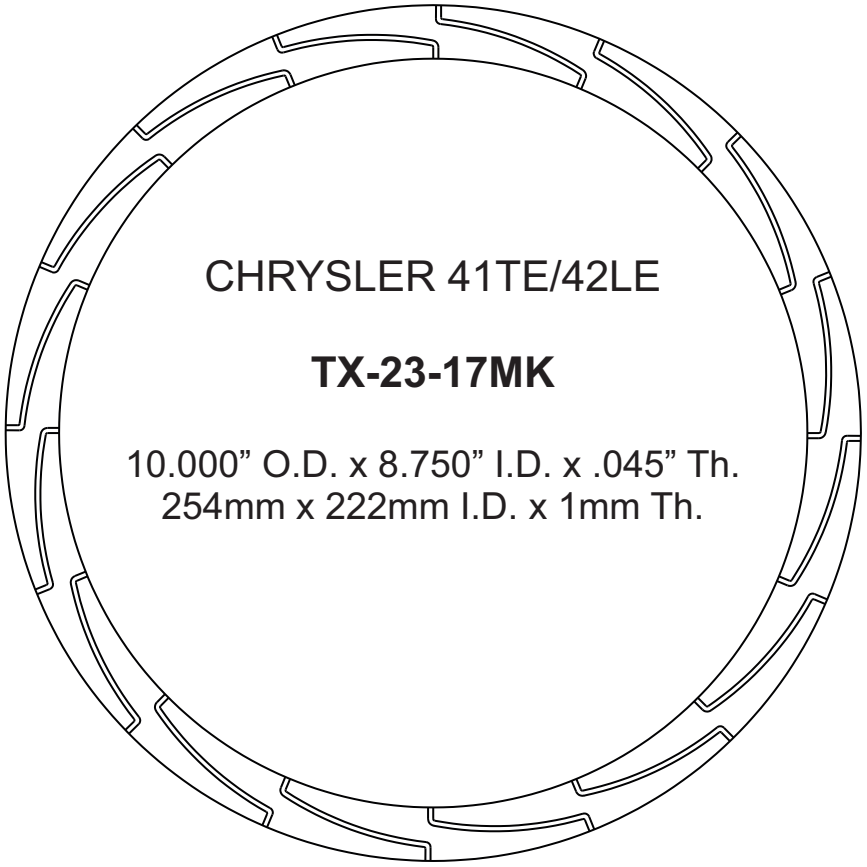

CHRYSLER 41TE/42LE

TX-23-17MK

10.000” O.D. x 8.750” I.D. x .045” Th.
254mm x 222mm I.D. x 1mm Th.

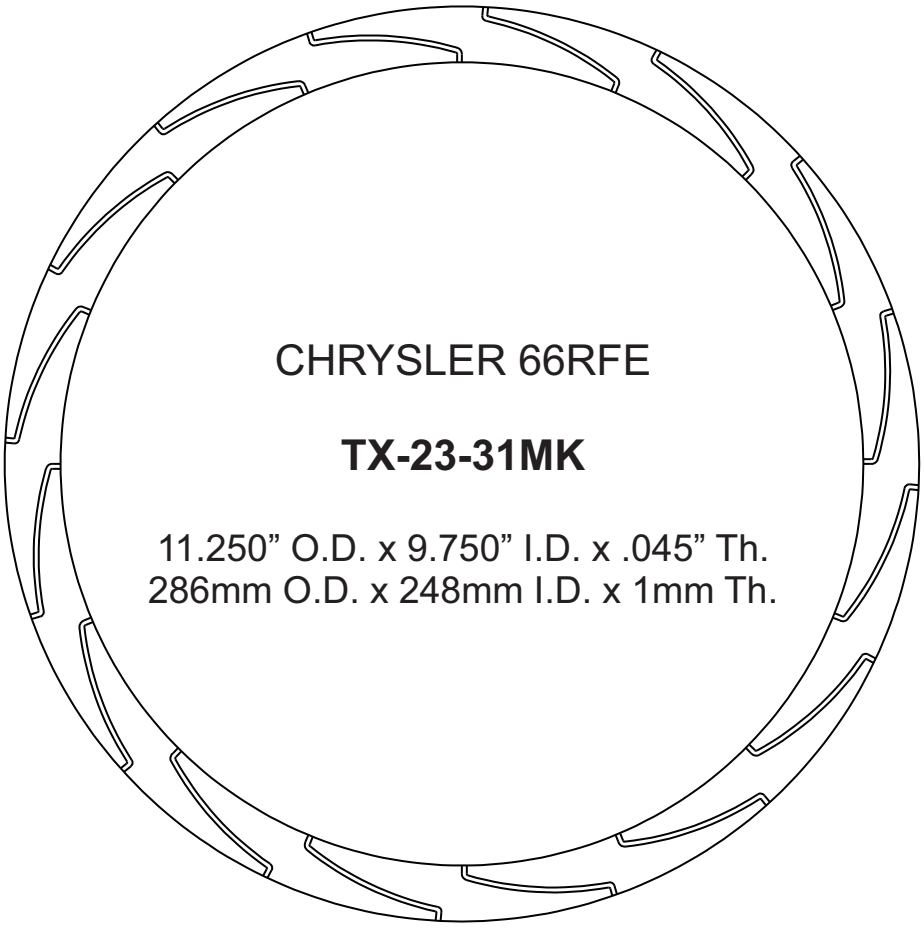

CHRYSLER 66RFE

TX-23-31MK

11.250” O.D. x 9.750” I.D. x .045” Th.
286mm O.D. x 248mm I.D. x 1mm Th.

CHRYSLER 68RFE

TX-23-26HC
(for TX-24-11 clutch plate)

11.655” O.D. x 10.170” I.D. x .045” Th.
296mm O.D. x 258mm I.D. x 1 Th.

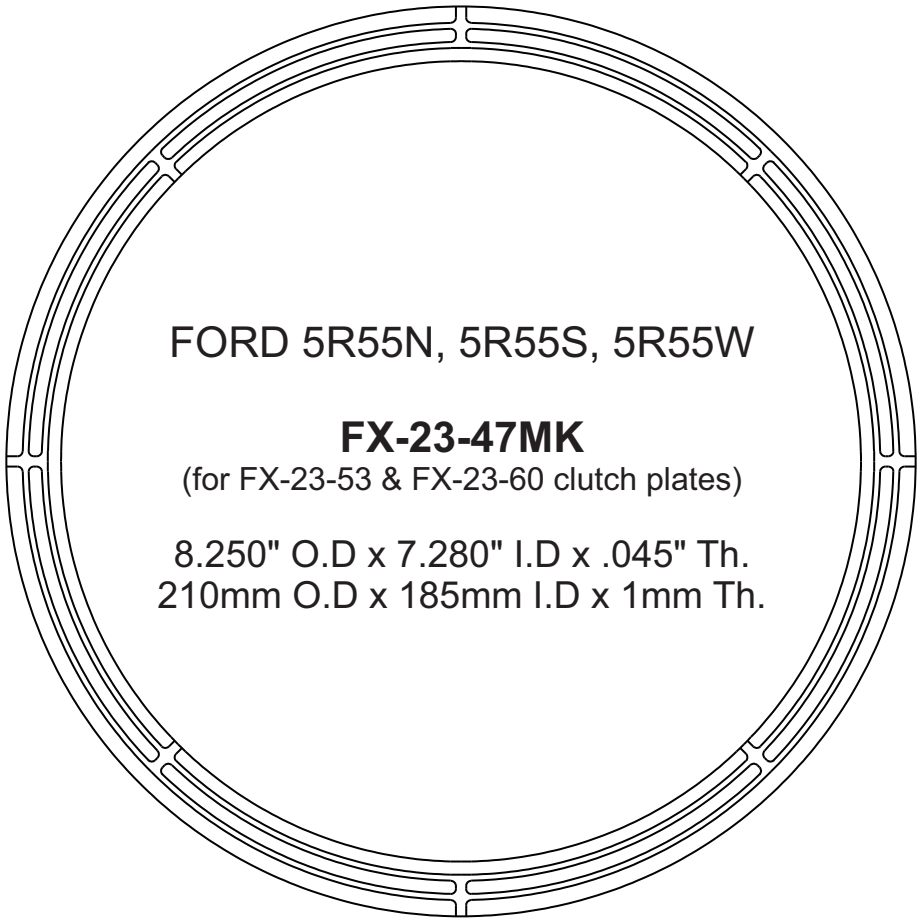

FORD 5R55N, 5R55S, 5R55W

FX-23-47MK

(for FX-23-53 & FX-23-60 clutch plates)

8.250" O.D x 7.280" I.D x .045" Th.
210mm O.D x 185mm I.D x 1mm Th.

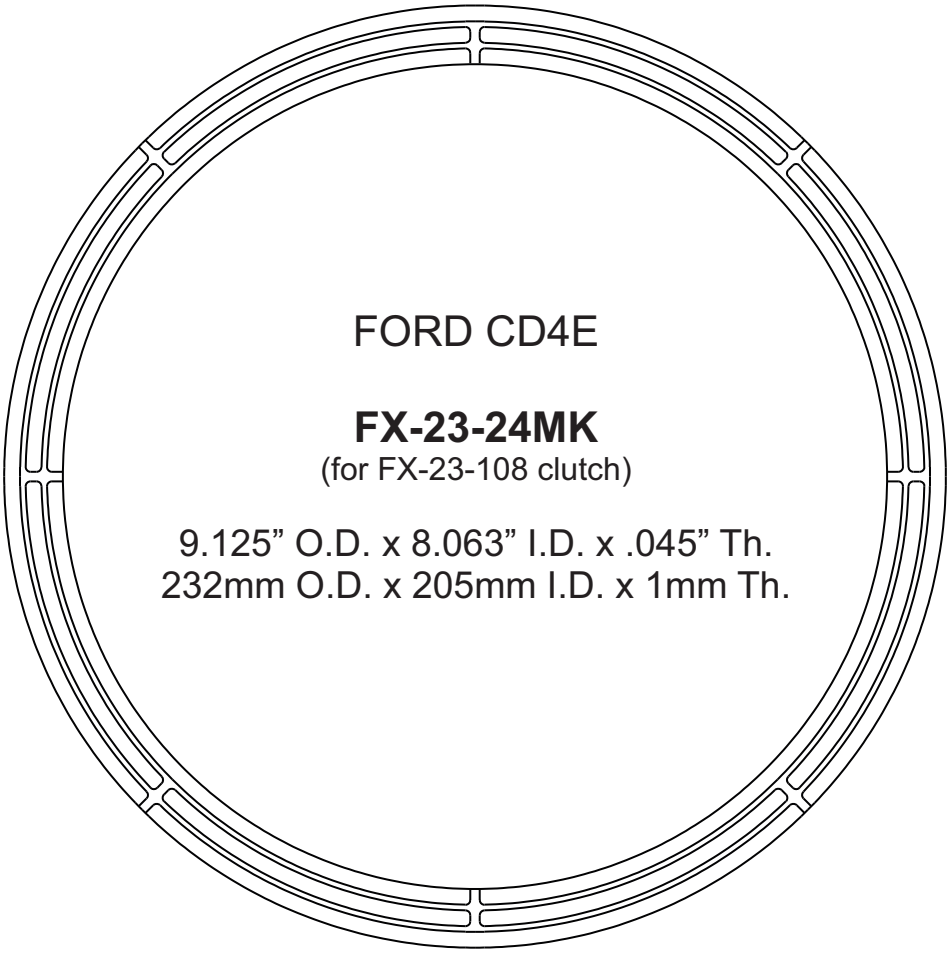

FORD CD4E

FX-23-24MK

(for FX-23-108 clutch)

9.125” O.D. x 8.063” I.D. x .045” Th.
232mm O.D. x 205mm I.D. x 1mm Th.

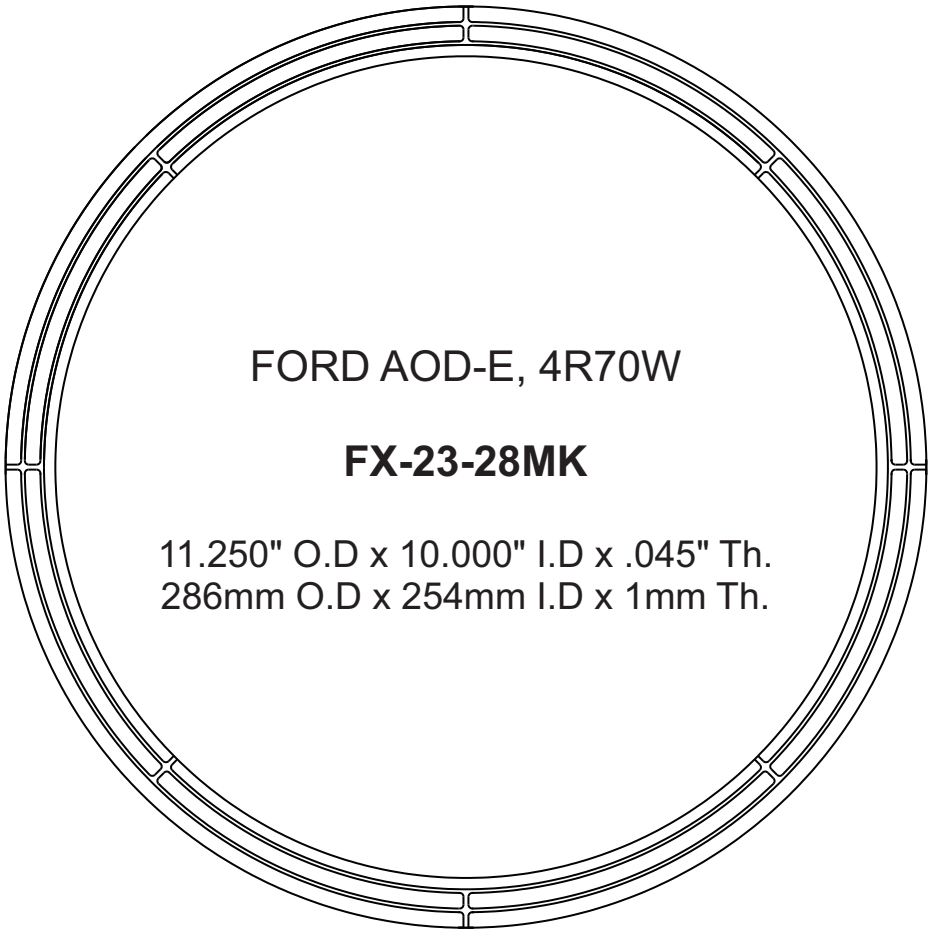

FORD AOD-E, 4R70W

FX-23-28MK

11.250" O.D x 10.000" I.D x .045" Th.
286mm O.D x 254mm I.D x 1mm Th.

FORD AOD-E, 4R70W

FX-23-26MK

10.562" O.D x 9.312" I.D x .045" Th.
268mm O.D x 237mm I.D x 1mm Th.

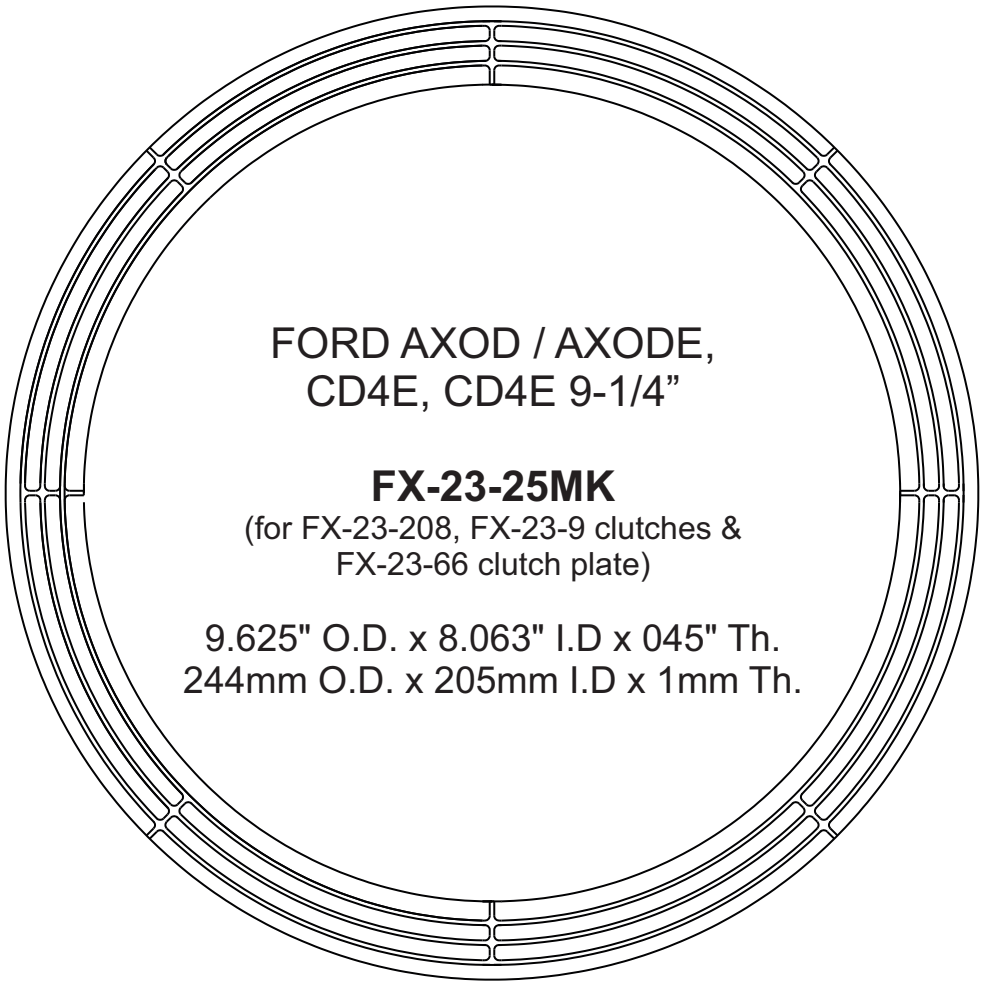

FORD AXOD / AXODE,
CD4E, CD4E 9-1/4”

FX-23-25MK

(for FX-23-208, FX-23-9 clutches &
FX-23-66 clutch plate)

9.625" O.D. x 8.063" I.D x 045" Th.
244mm O.D. x 205mm I.D x 1mm Th.

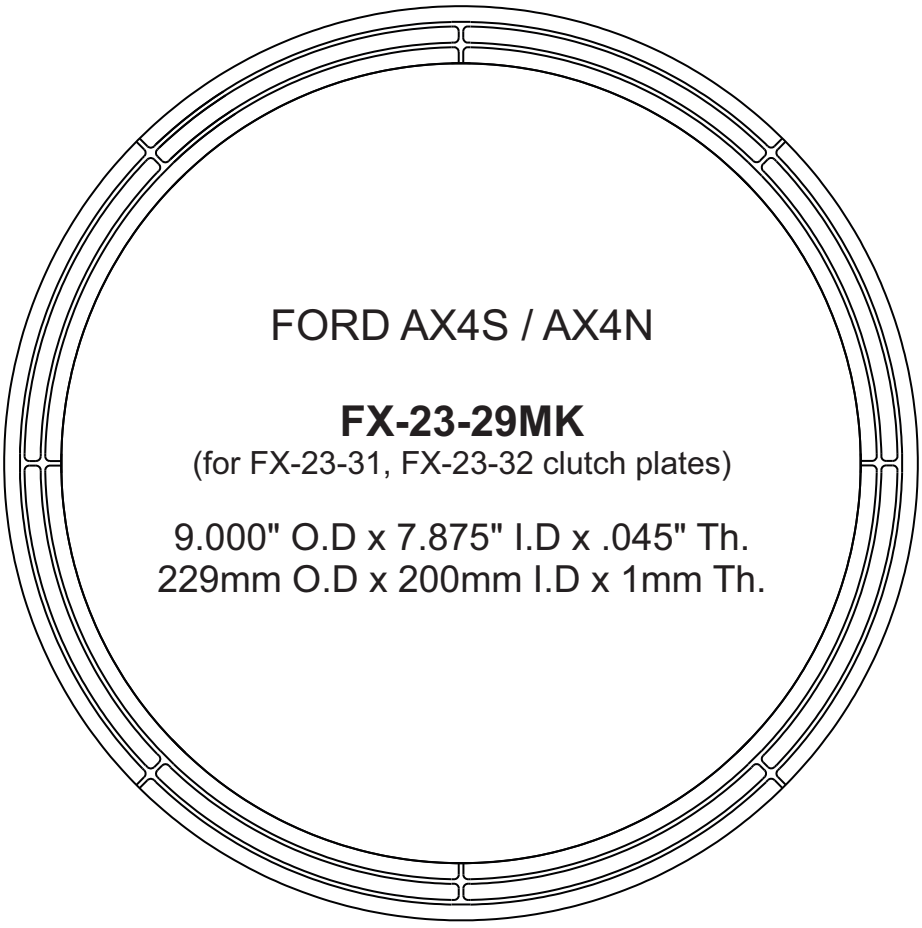

FORD AX4S / AX4N

FX-23-29MK

(for FX-23-31, FX-23-32 clutch plates)

9.000" O.D x 7.875" I.D x .045" Th.
229mm O.D x 200mm I.D x 1mm Th.

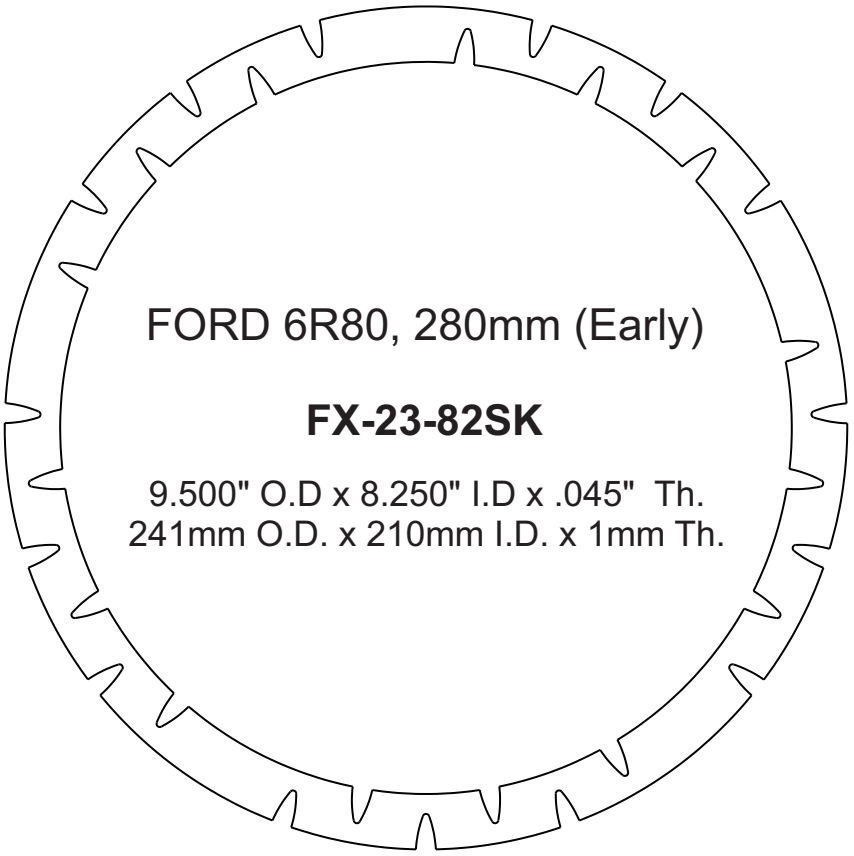

FORD 6R80, 280mm (Early)

FX-23-82SK

9.500" O.D x 8.250" I.D x .045" Th.
241mm O.D. x 210mm I.D. x 1mm Th.

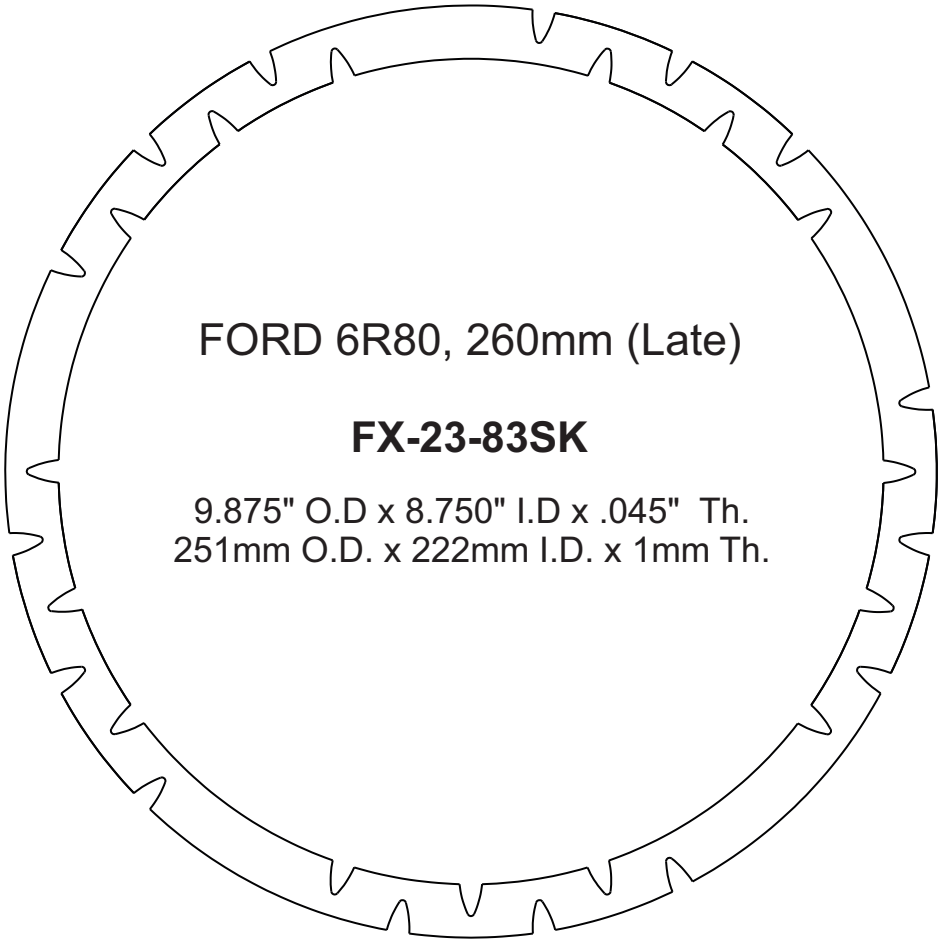

FORD 6R80, 260mm (Late)

FX-23-83SK

9.875" O.D x 8.750" I.D x .045" Th.
251mm O.D. x 222mm I.D. x 1mm Th.

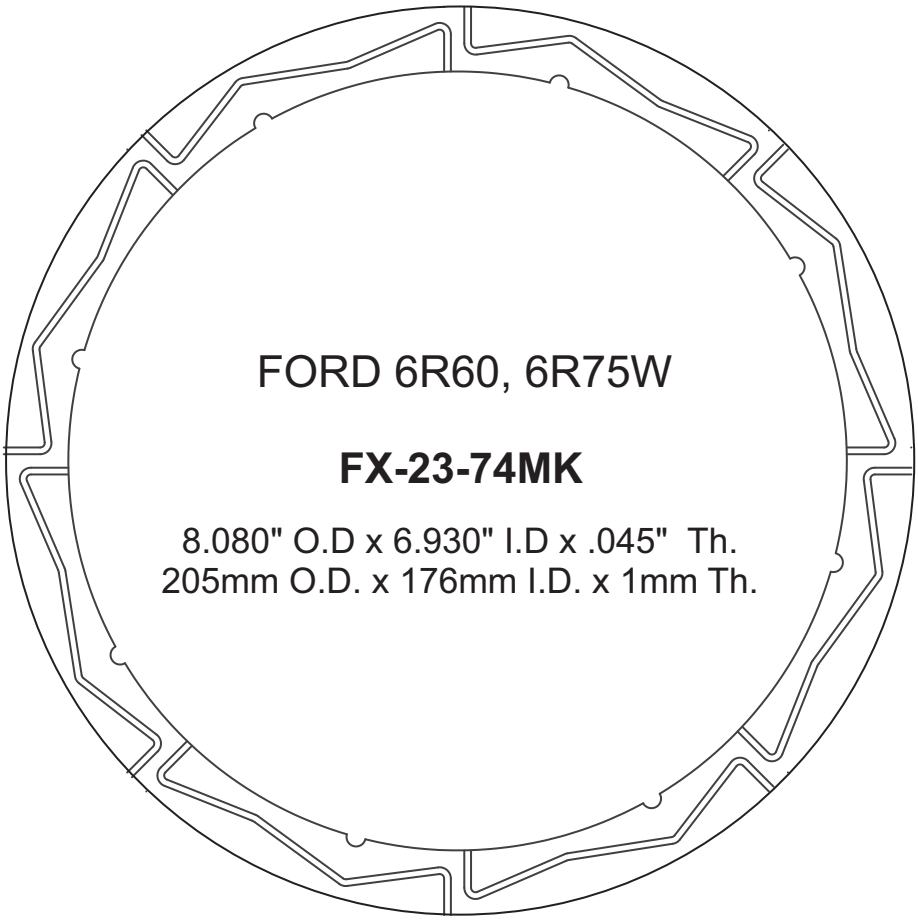

FORD 6R60, 6R75W

FX-23-74MK

8.080" O.D x 6.930" I.D x .045" Th.
205mm O.D. x 176mm I.D. x 1mm Th.

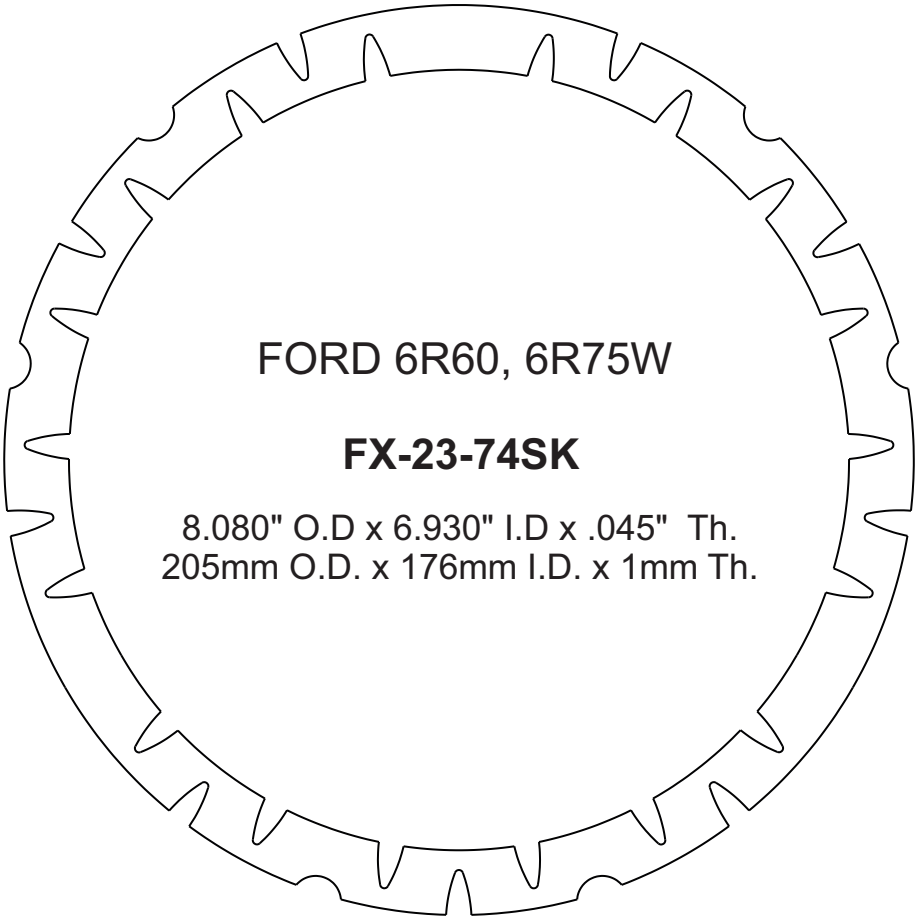

FORD 6R60, 6R75W

FX-23-74SK

8.080" O.D x 6.930" I.D x .045" Th.
205mm O.D. x 176mm I.D. x 1mm Th.

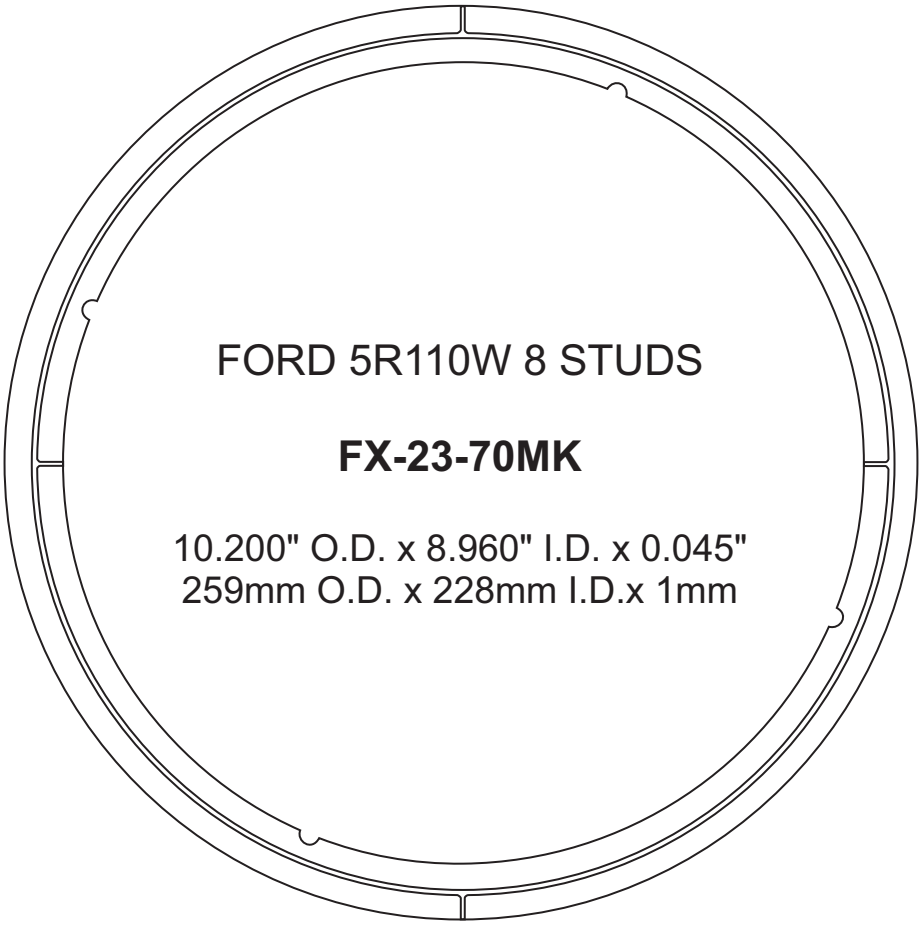

FORD 5R110W 8 STUDS

FX-23-70MK

10.200" O.D. x 8.960" I.D. x 0.045"
259mm O.D. x 228mm I.D.x 1mm

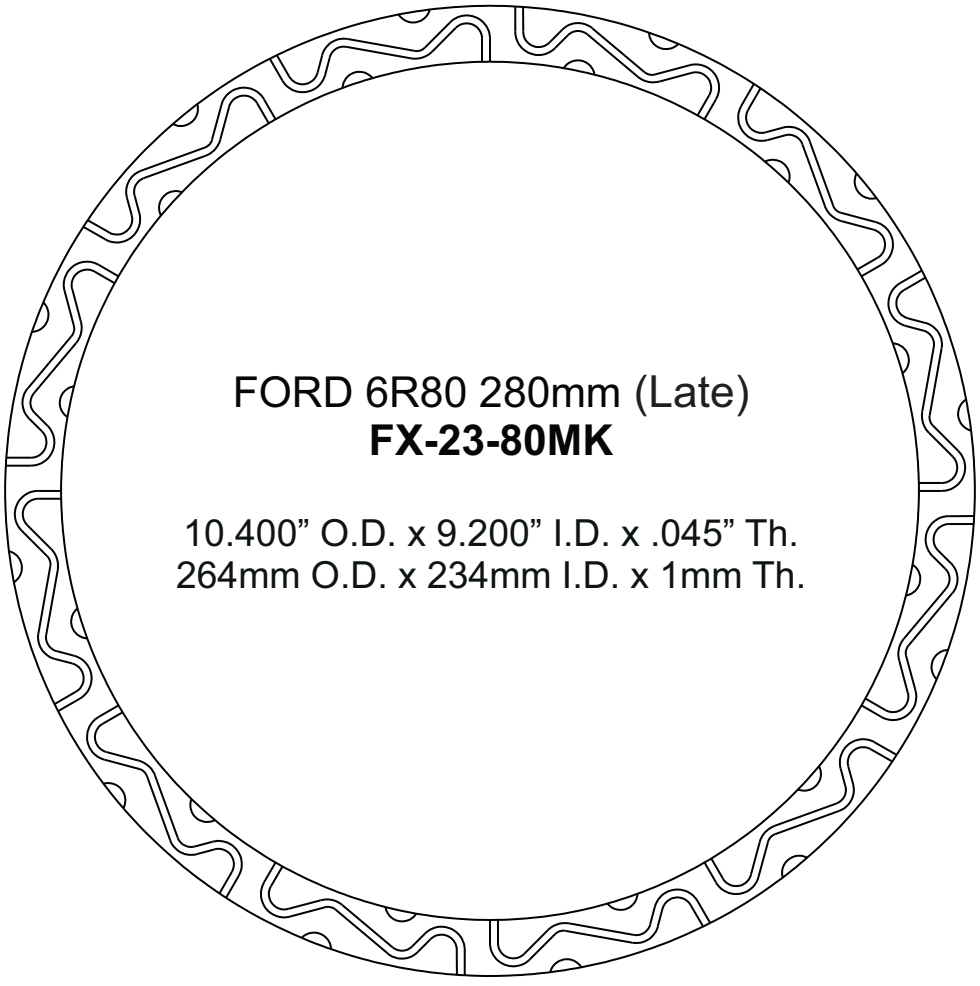

FORD 6R80 280mm (Late)
FX-23-80MK

10.400” O.D. x 9.200” I.D. x .045” Th.
264mm O.D. x 234mm I.D. x 1mm Th.

AISIN SEIKI, AS68RC, A465

YX-23-23AMK

7.430" O.D x 5.800" I.D x .10" Th.
188.7mm O.D. x 147.3mm I.D. x 2.6mm Th.

YX-23-23KK
(2 grooved linings)

AISIN SEIKI, AS68RC, A465

YX-23-23BMK

7.430" O.D x 5.800" I.D x .10" Th.
188.7mm O.D. x 147.3mm I.D. x 2.6mm Th.

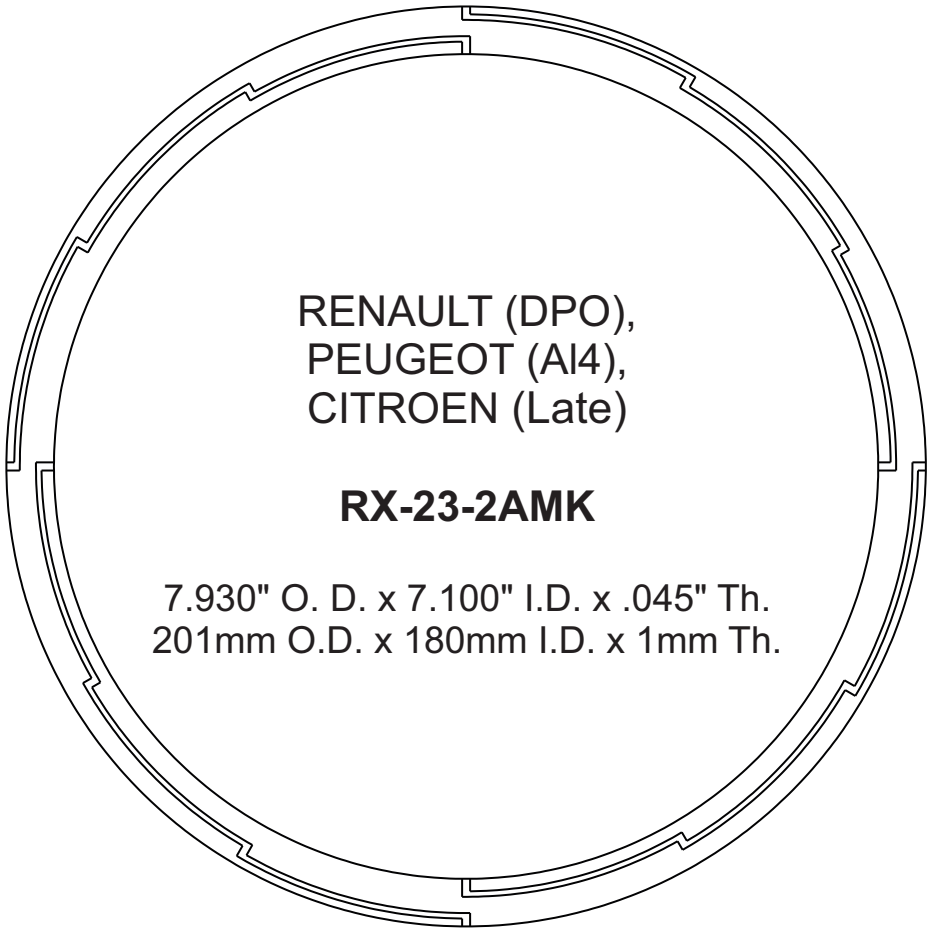

RX-23-2KK
(2 grooved linings)

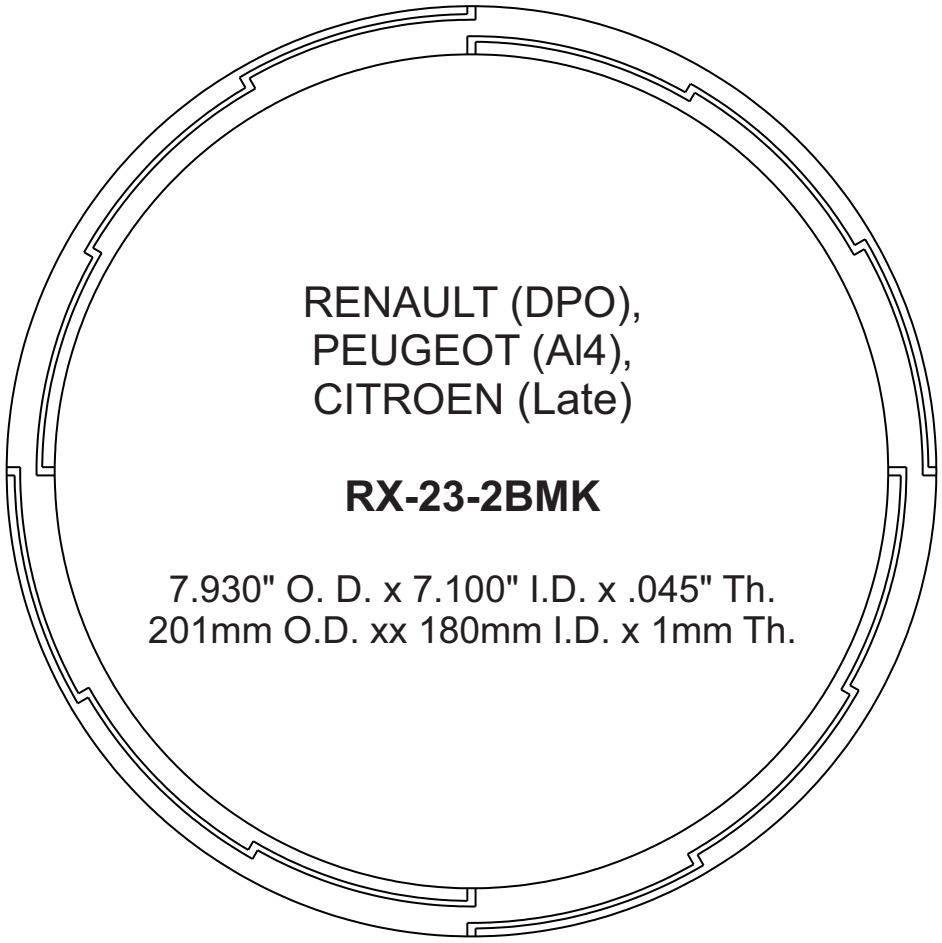

ZF SACHS ZF5HP19FL

PX-23-12MK

(for PX-26-7 clutch plate)

9.438" O.D. x 8.148" I.D x .045" Th.
240mm O.D. x 207mm I.D. x 1mm Th.

ZF SACHS ZF6HP26 275mm

PX-23-24K

(PX-23-24 are for 2 sides of PX-26-15 clutch plate)

8.250" O. D. x 7.293" I.D. x .045" / .070" Th.
209mm O.D. x 185mm I.D. x 1.8mm Th.

ZF SACHS
ZF6HP19 245mm LuK, GM 6L45

PX-23-25MK

8.645” O.D. x 7.325” I.D. x .045” Th.
220mm O.D. x 186mm I.D. x 1mm Th.

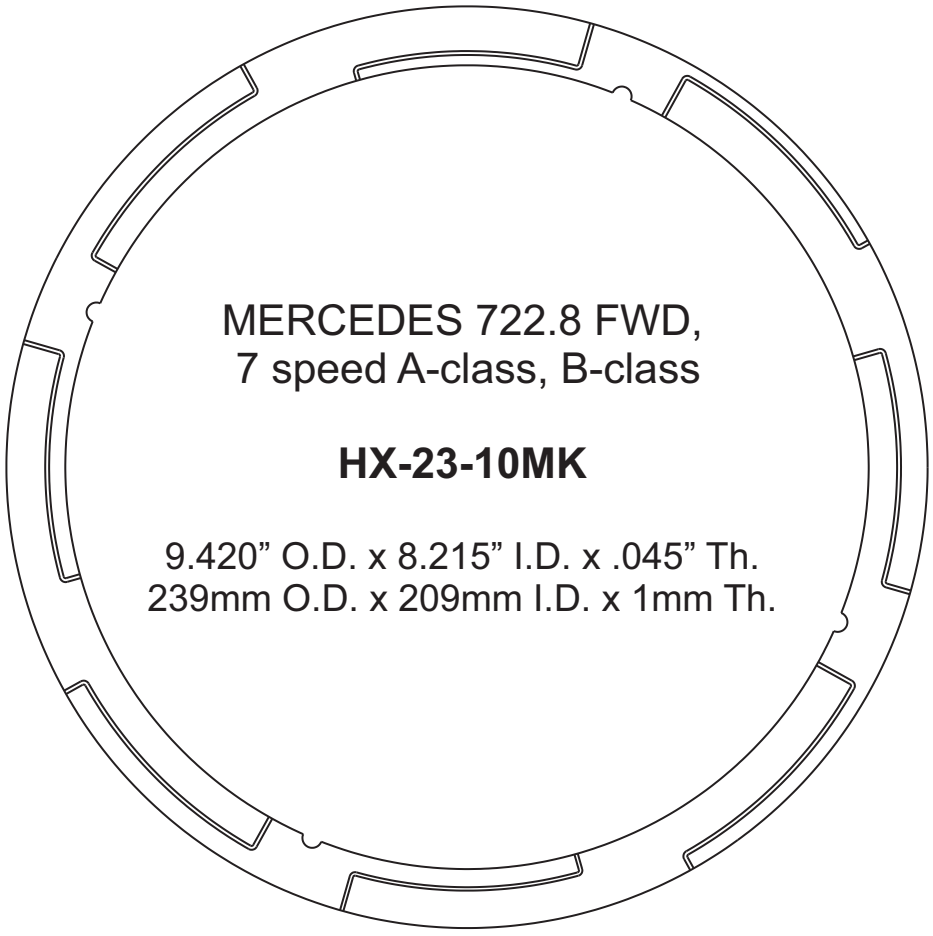

MERCEDES 722.8 FWD,
7 speed A-class, B-class

HX-23-10MK

9.420” O.D. x 8.215” I.D. x .045” Th.
239mm O.D. x 209mm I.D. x 1mm Th.

GM 8L90

SX-23-71M

9.842” O.D. x 8.675” I.D. x .045” Th.
250mm O.D. x 220mm I.D. x 1mm Th.

WARRANTY

All parts are warranted against defects in material and workmanship for a period of 1 year from the date of the original customer purchase.

Bonding results are equipment and process dependent, and only our engineering is authorized to assess them.

Our obligation under this warranty is limited to replacement of the defective part or, at our option, refund of the purchase price, conditional in either case upon the return of the part to us.

We neither assume nor authorize any other person to assume for us any other liability. In no event will Tri Component Products be liable for any consequential or incidental damages, including claims for labor charges, transportation, or loss of revenue.

All procedures and part recommendations described in Tri Component Publications are for information only and no responsibility is assumed for their suitability in any particular application.

It is extremely important to observe adhesive shelf life of coated linings (12 months). Avoid excessive storage heat. Liquid adhesives have a shelf life of 6 months, refrigeration recommended (must avoid freezing).

TRI COMPONENT
PRODUCTS CORPORATION

Tri Component
Product Corporation
973 Brook Ave.
Bronx, New York
10451-4209

www.tricomponent.com
sales@tricomponent.com

800 FONE-TRI
800 366-3874
718 402-2400
Fax: 718 402-2151

© 2020 Tri Component Products Corporation